Rozmery v mm
Maße in mm
Dimensions in mm

VARIANT RN 03

170kg

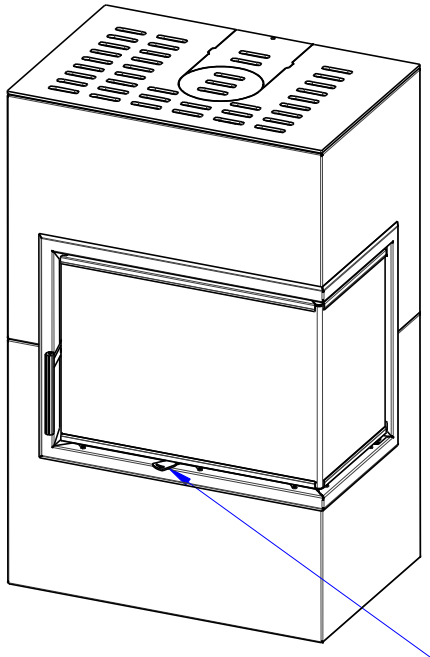

Primarni a sekundarni vzduch
Primärluft und Sekundärluft
Primary and secondary air

Litinový odvod
koure - Cast iron
spigot - Der
gusseiserne Rauchabgang

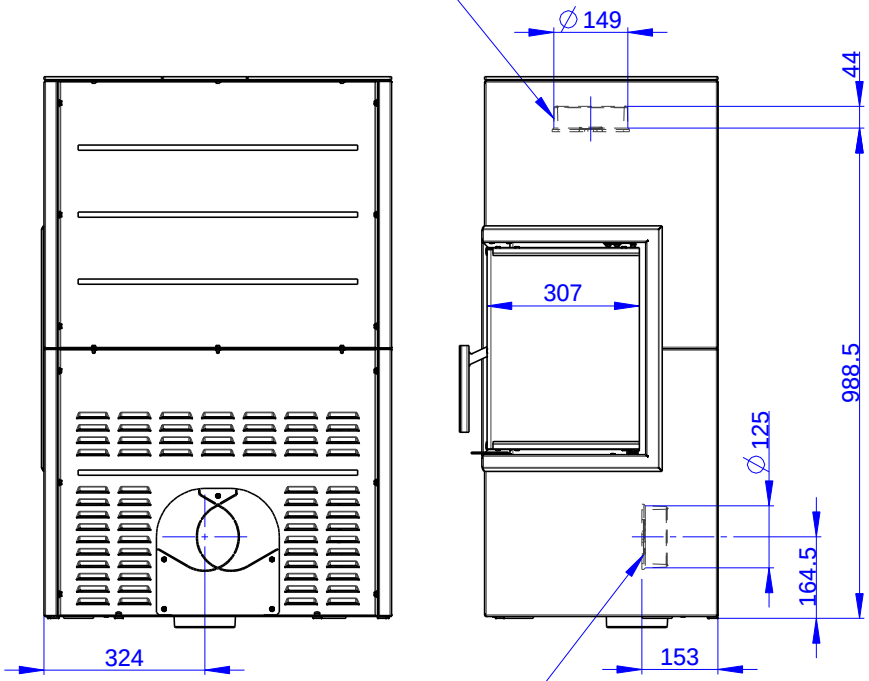

Centralni privod vzduchu
Central air inlet
Zentralluftzufuhr

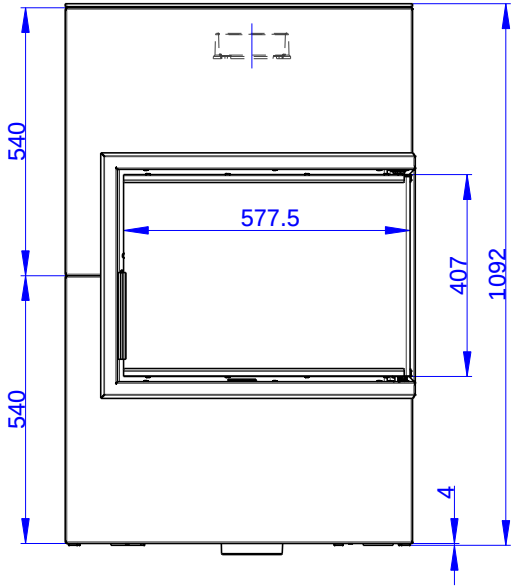

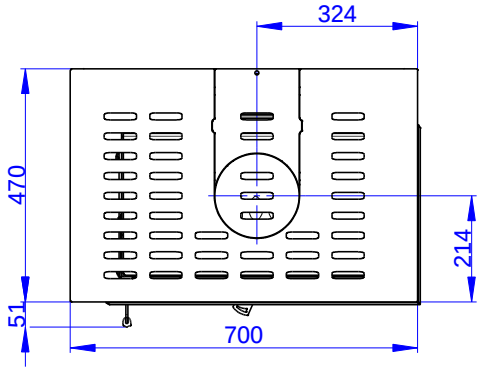

Rozmery v mm
Maße in mm
Dimensions in mm

VARIANT RN 03 + VARI RN 03 S1

179kg

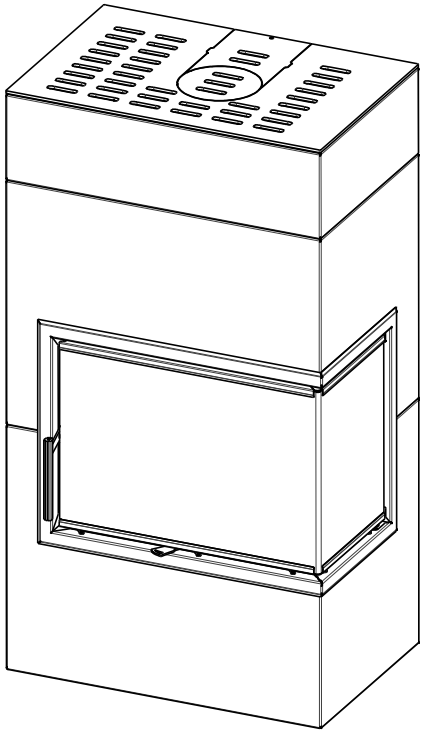

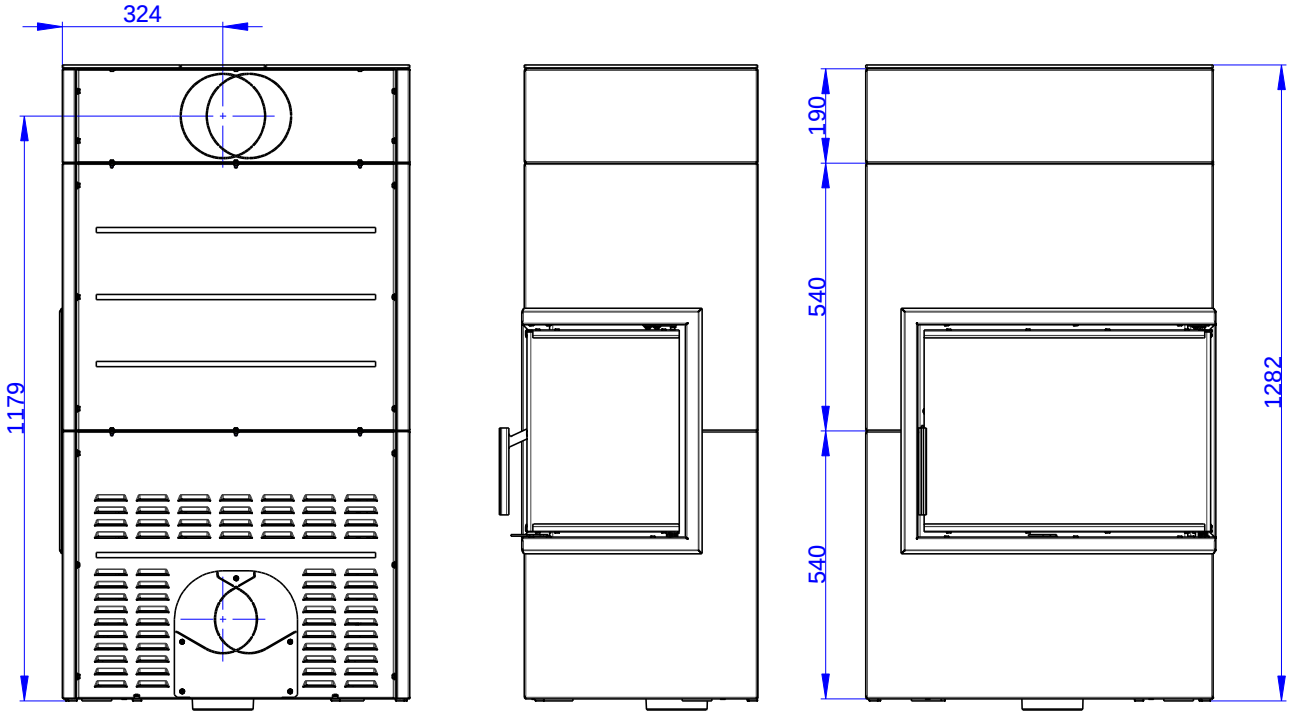

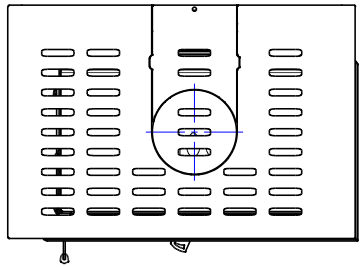

Rozmery v mm
Maße in mm
Dimensions in mm

VARIANT RN 03 + 2xVARI RN 03 S1

188kg

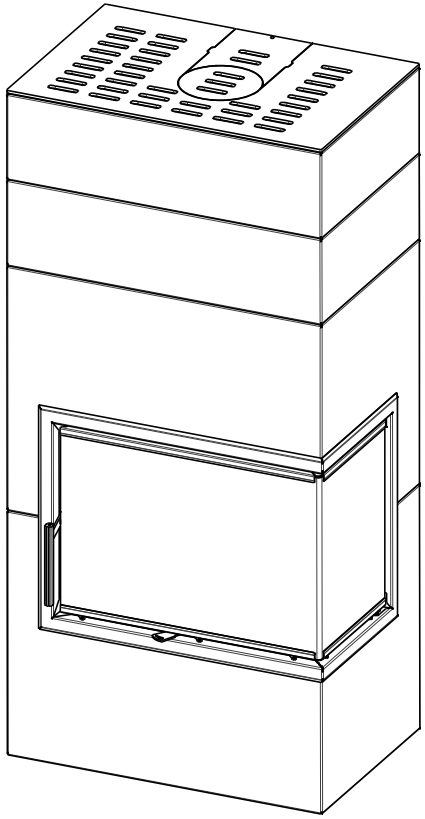

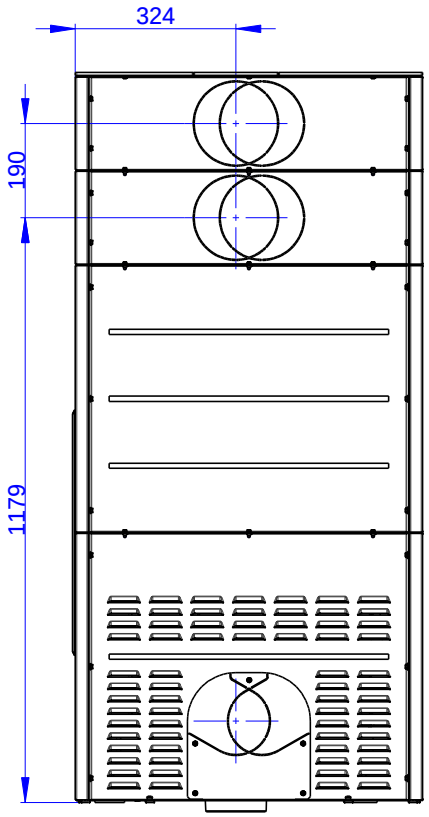

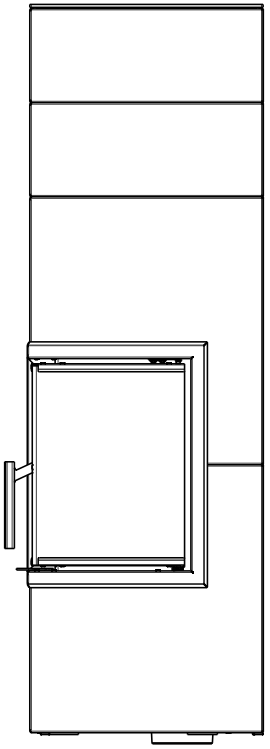

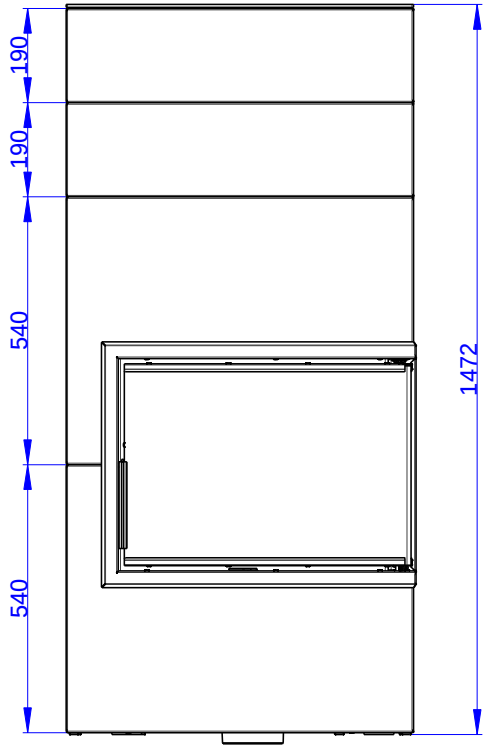

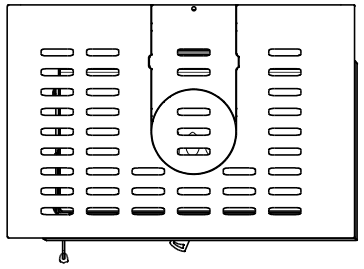

Rozmery v mm
Maße in mm
Dimensions in mm

VARIANT RN 03 + VARI RN 03 S2

187kg

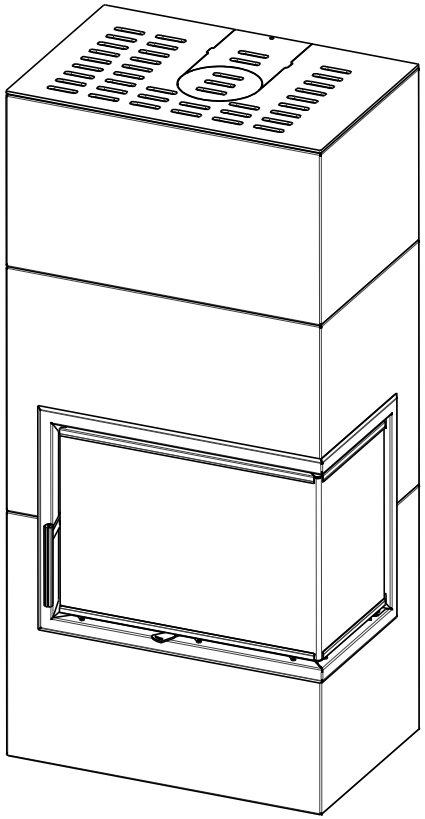

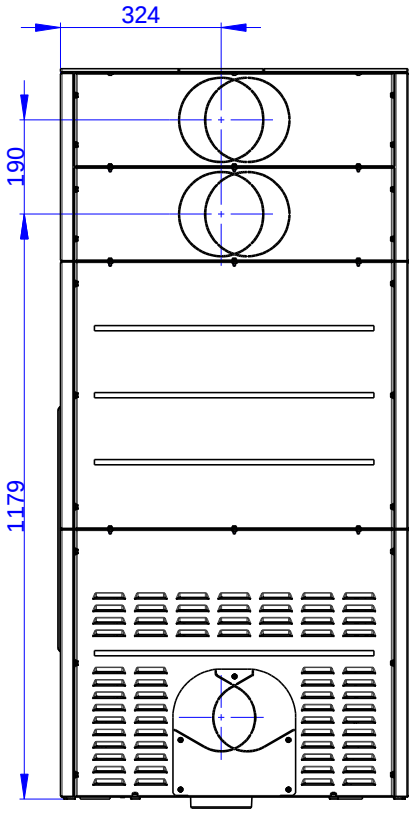

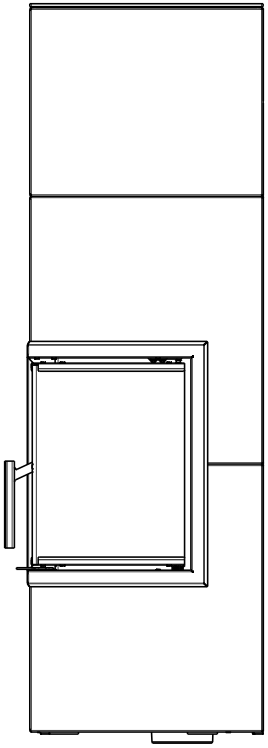

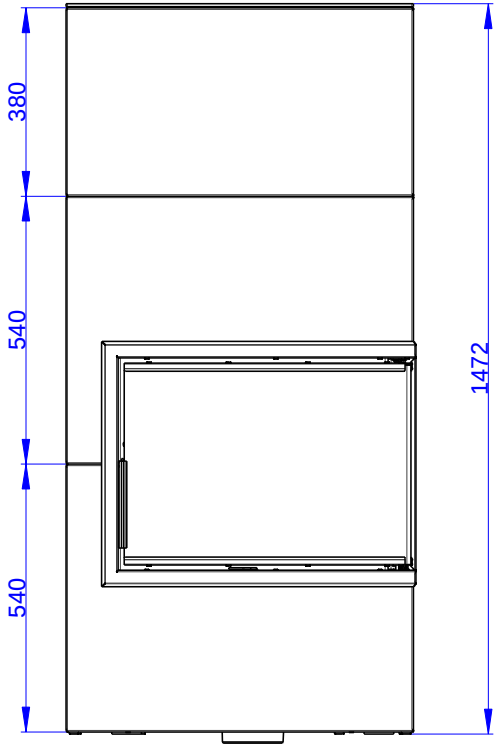

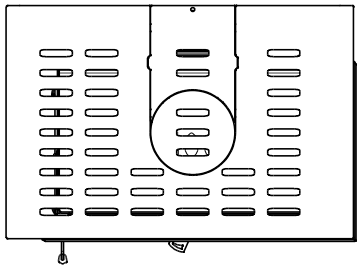

Rozmery v mm
Maße in mm
Dimensions in mm

VARIANT RN 03 + 3xVARI RN 03 S1

198kg

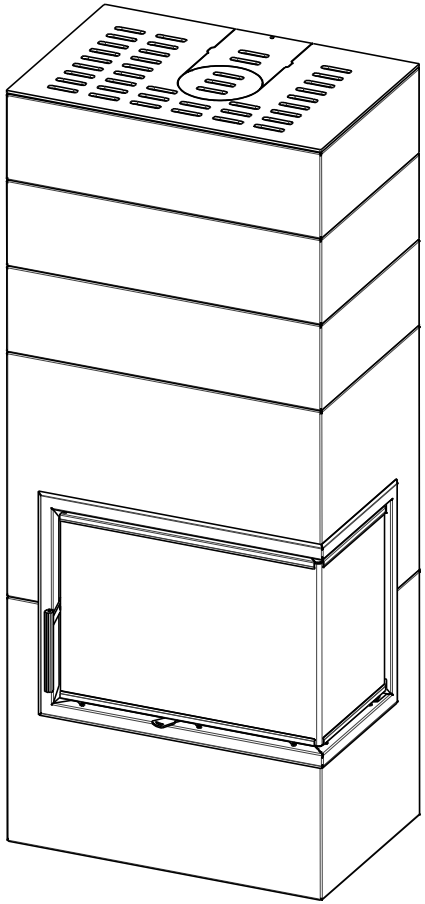

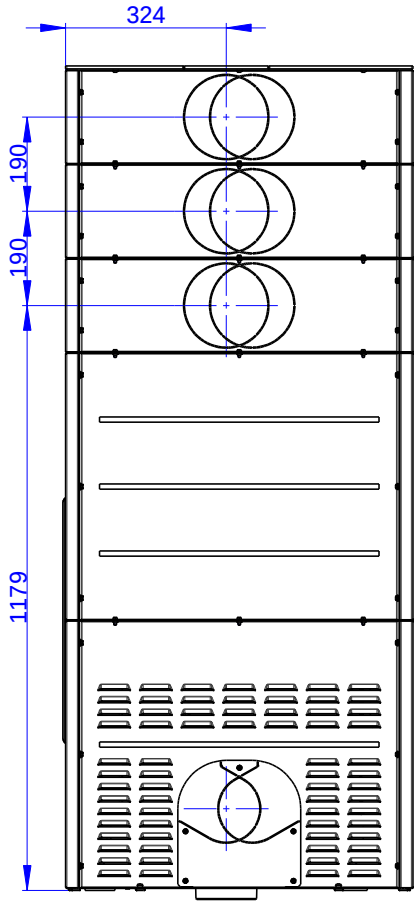

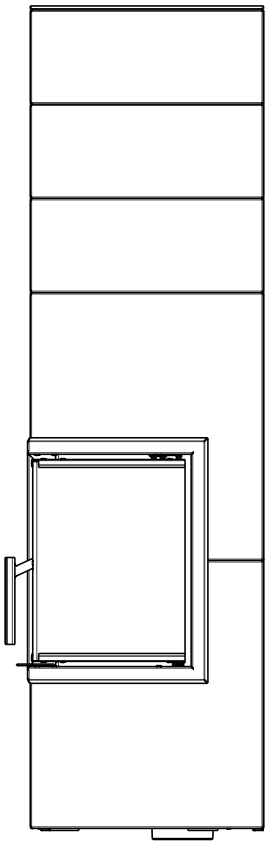

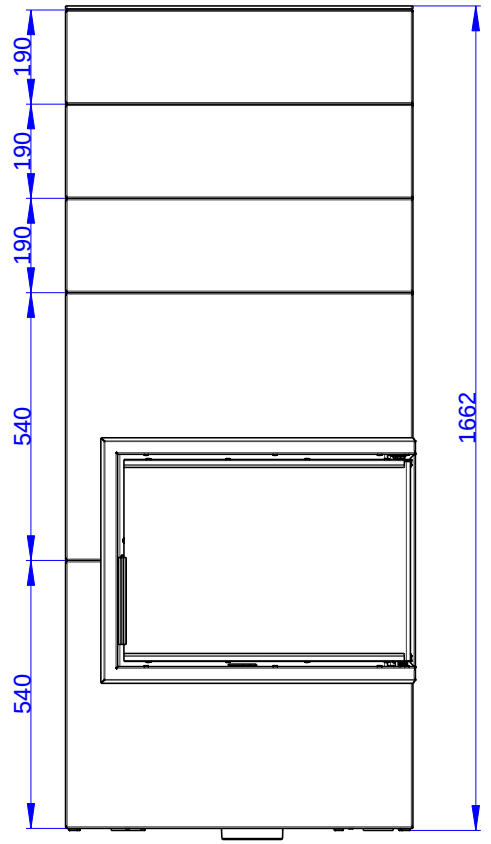

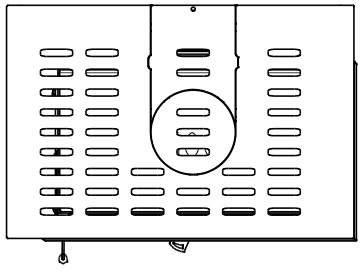

Rozmery v mm
Maße in mm
Dimensions in mm

VARIANT RN 03 + VARI RN 03 S1 + VARI RN 03 S2

196kg

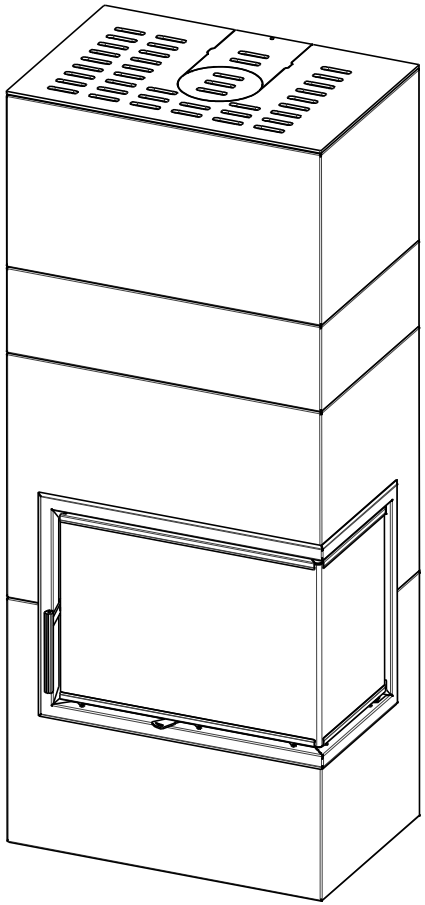

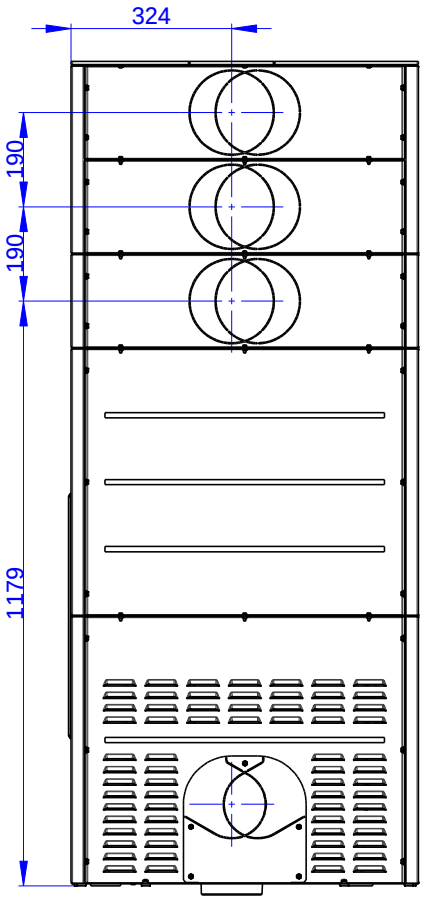

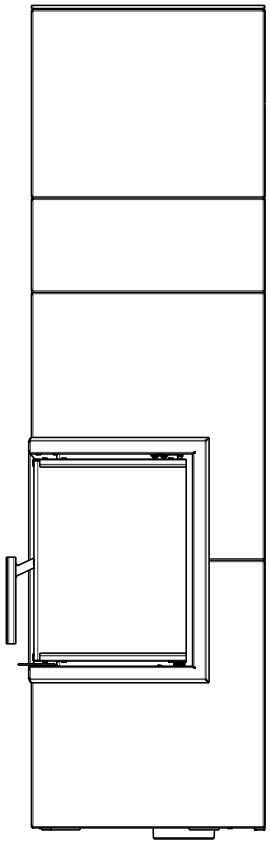

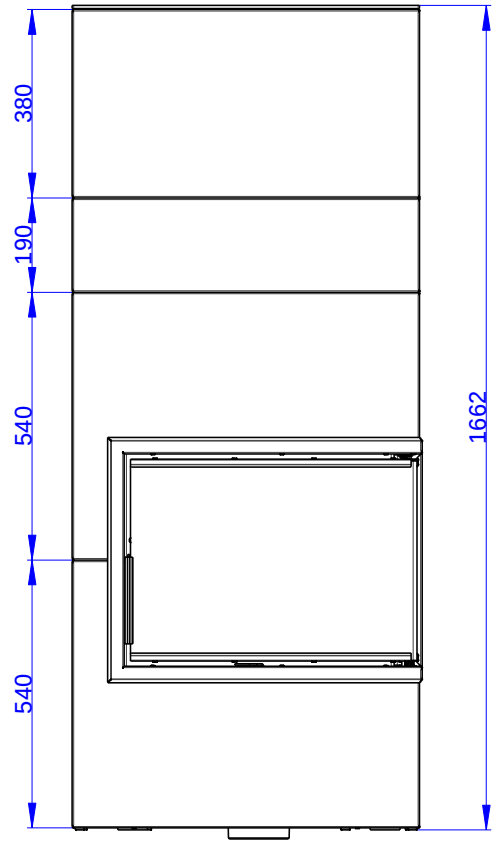

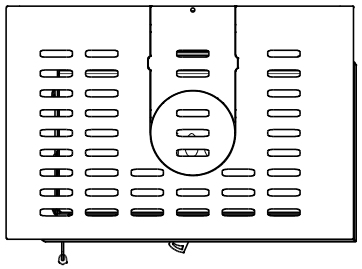

Rozmery v mm
Maße in mm
Dimensions in mm

VARIANT RN 03 + VARI RN 03 S2 + VARI RN 03 S1

196kg

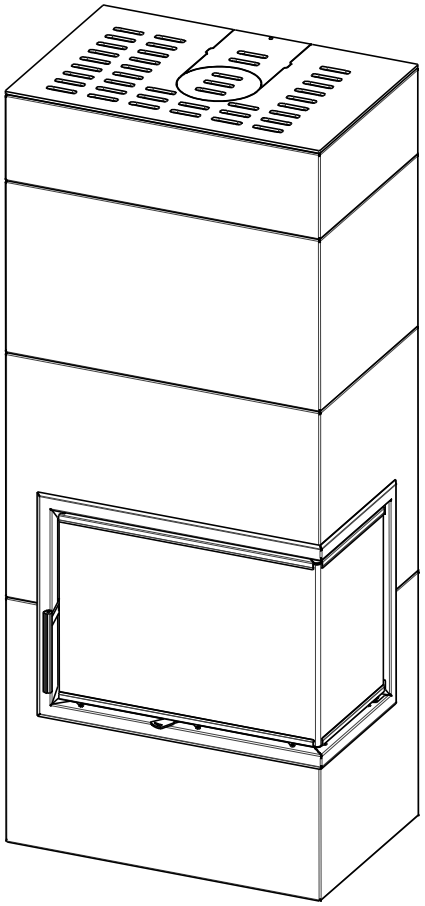

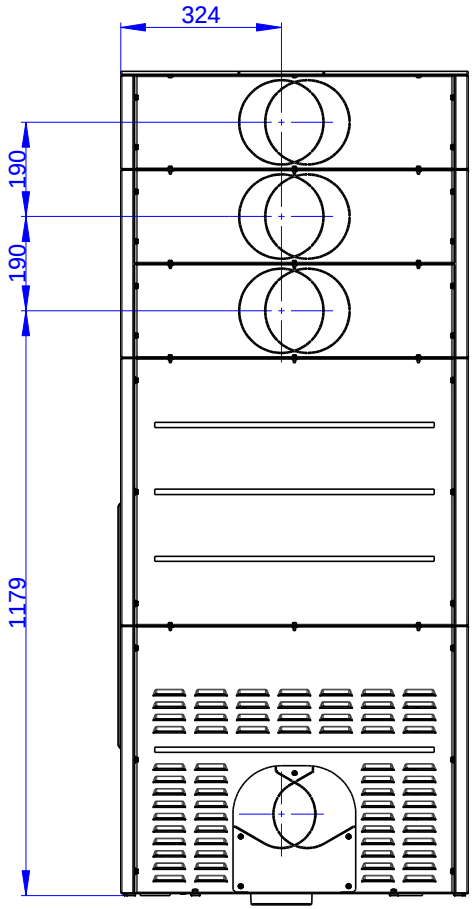

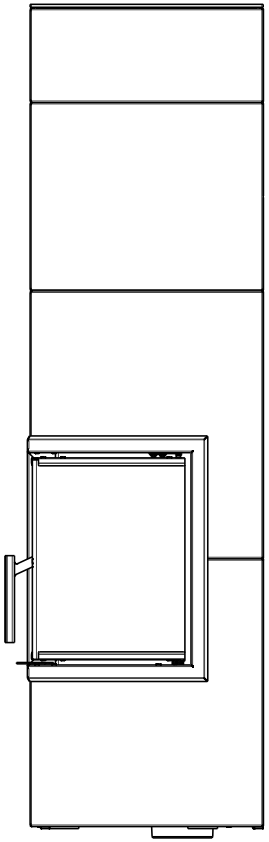

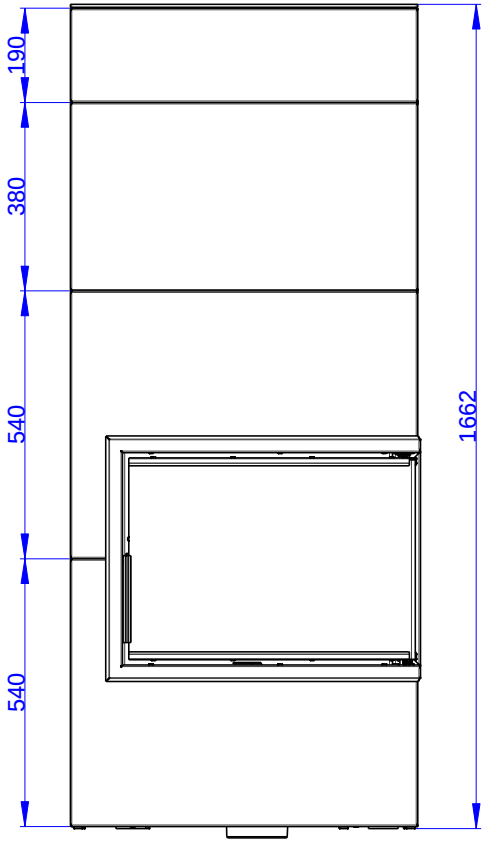

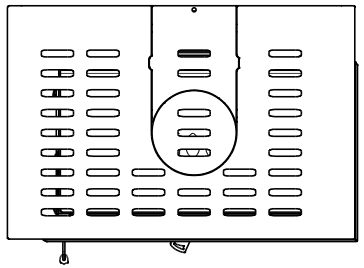

Rozmery v mm
Maße in mm
Dimensions in mm

VARIANT RN 03 + VARI RN 03 S3

183kg

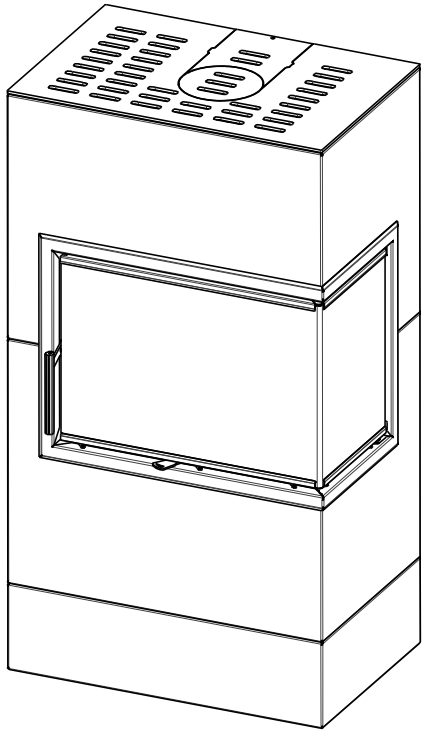

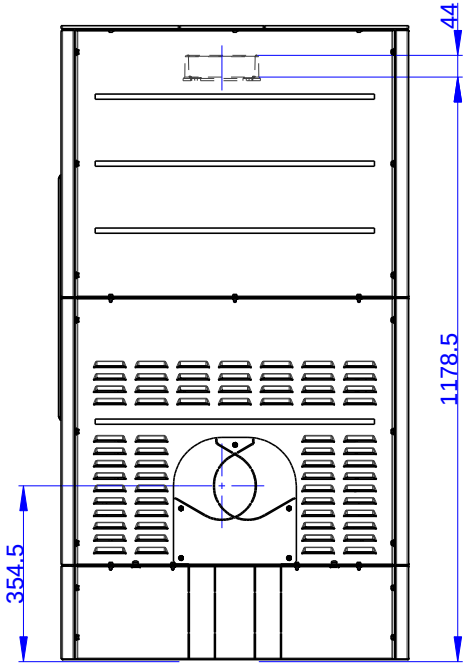

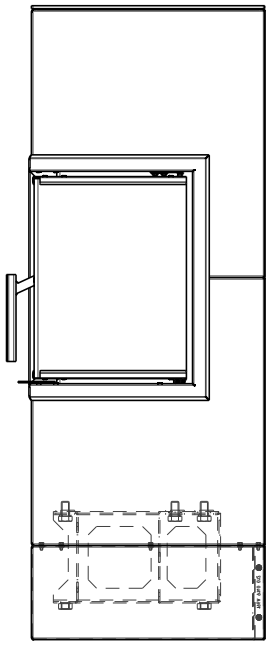

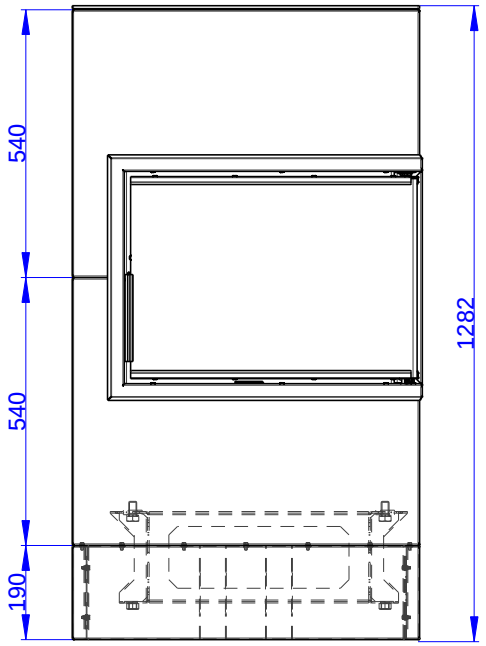

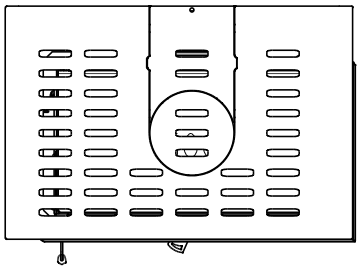

Rozmery v mm
Maße in mm
Dimensions in mm

VARIANT RN 03 + VARI RN 03 S1 + VARI RN 03 S3

192kg

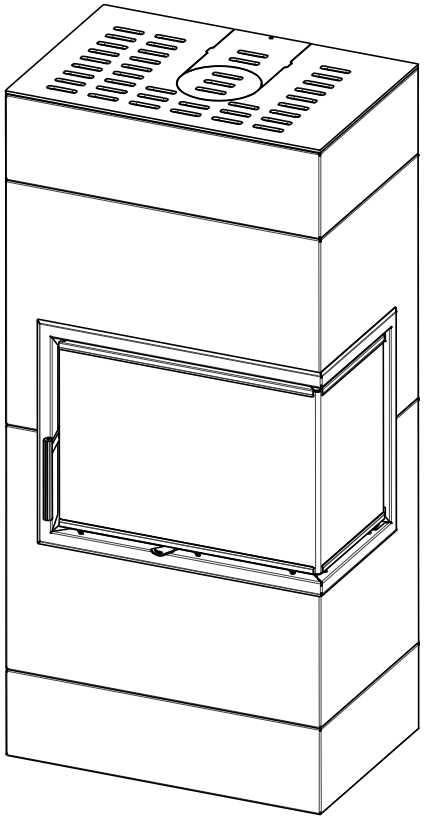

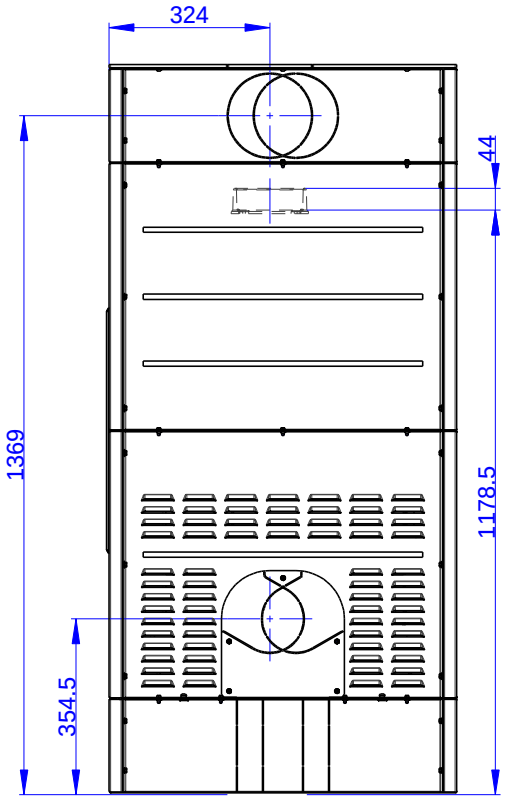

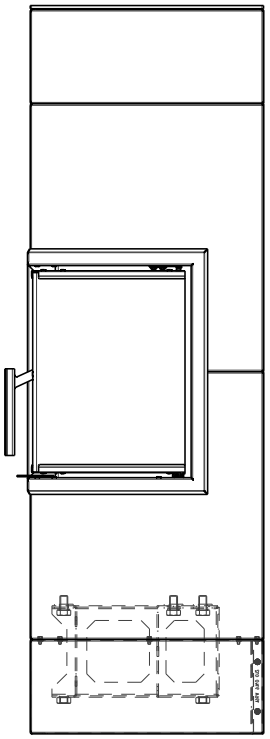

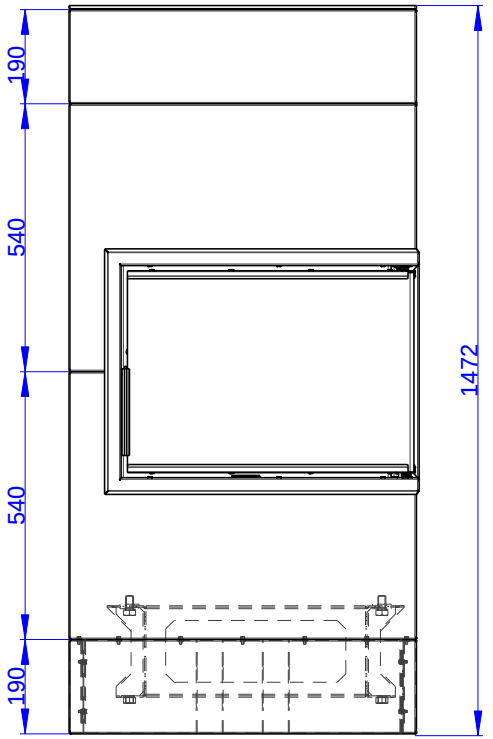

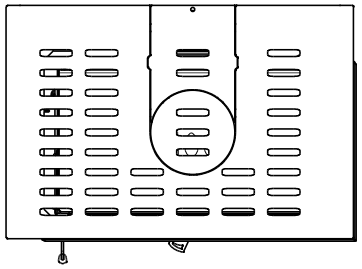

Rozmery v mm
Maße in mm
Dimensions in mm

VARIANT RN 03 + 2xVARI RN 03 S1 + VARI RN 03 S3

202kg

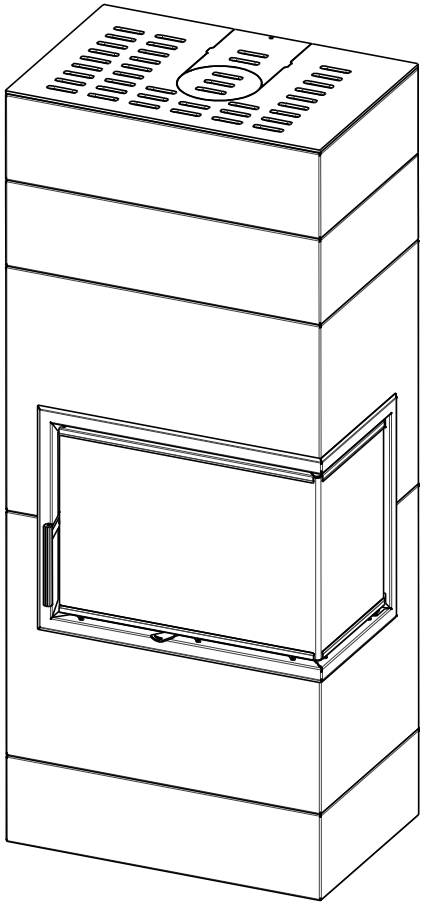

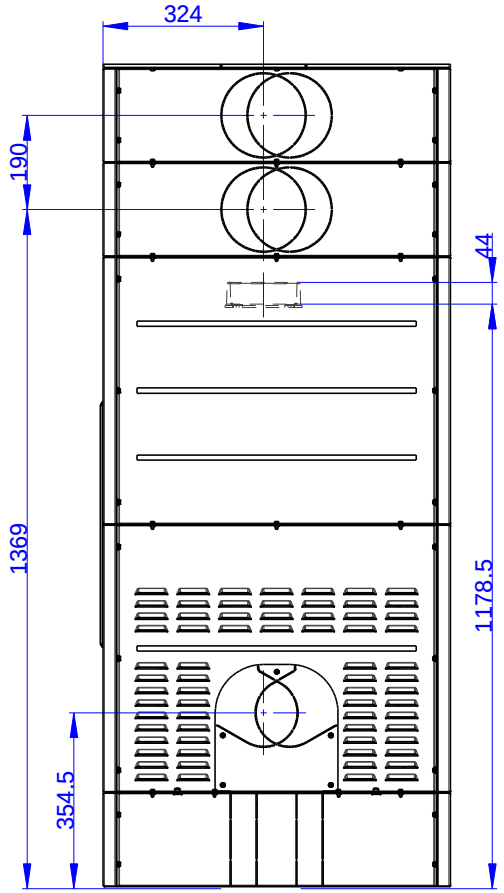

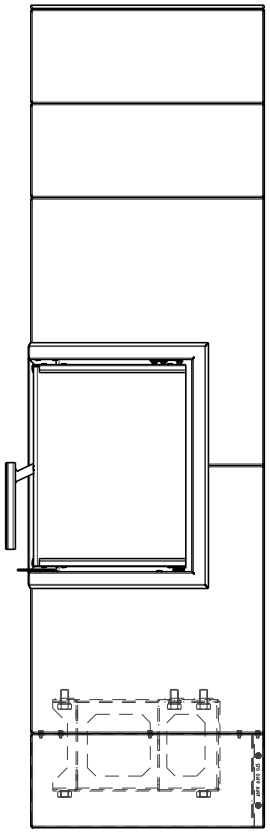

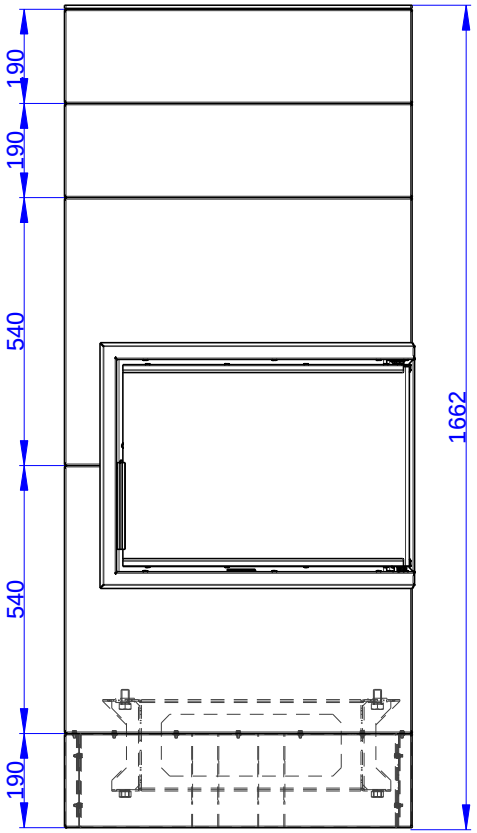

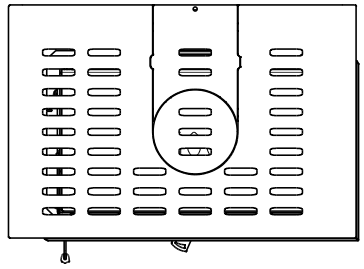

Rozmery v mm
Maße in mm
Dimensions in mm

VARIANT RN 03 + VARI RN 03 S2 + VARI RN 03 S3

214kg

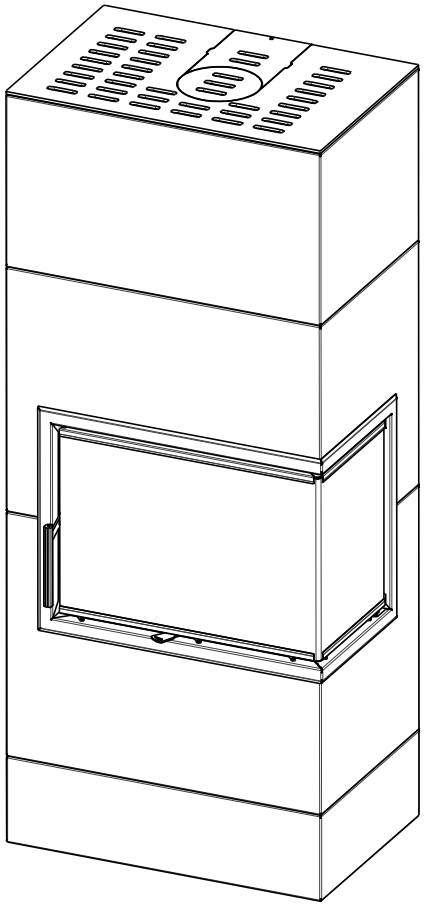

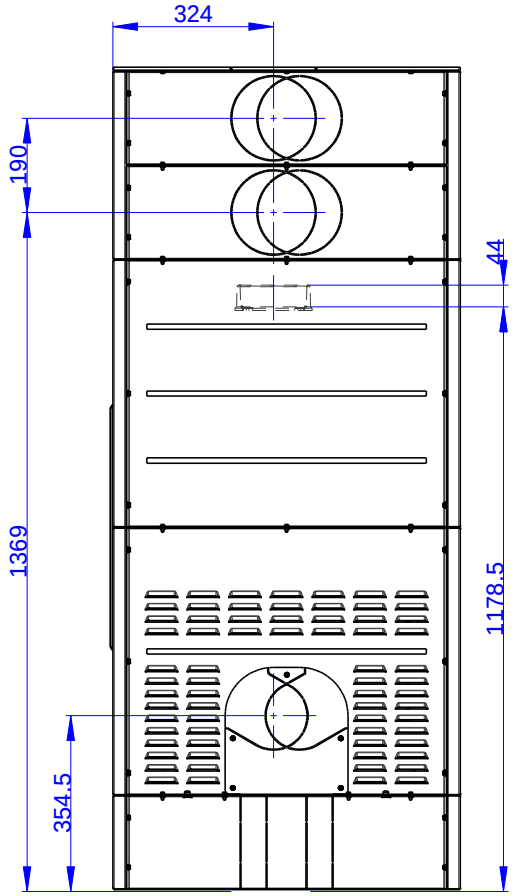

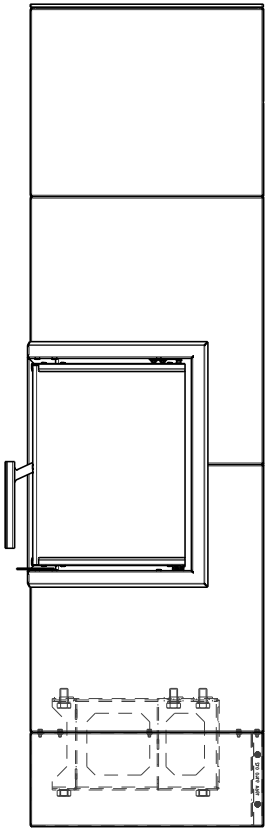

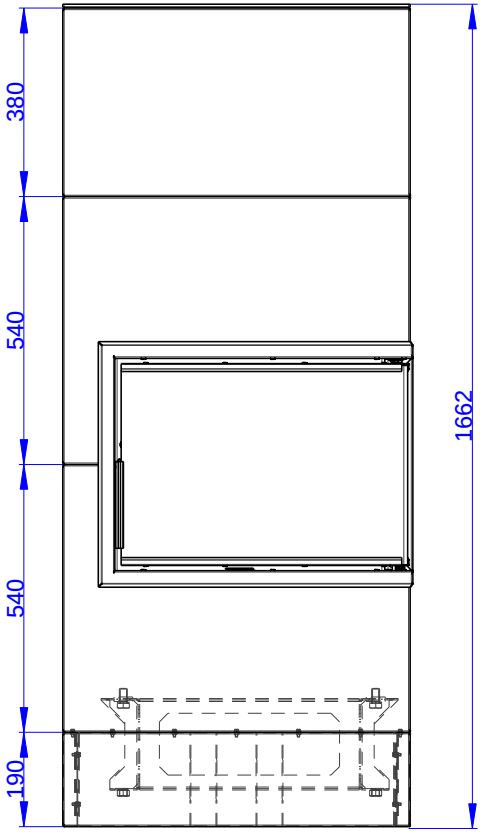

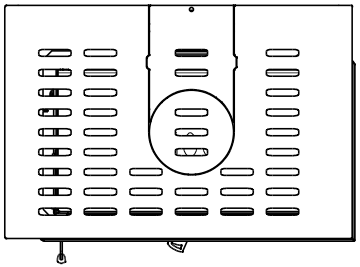

Rozmery v mm
Maße in mm
Dimensions in mm

VARIANT RN 03 + 3xVARI RN 03 S2 + VARI RN 03 S3

211kg

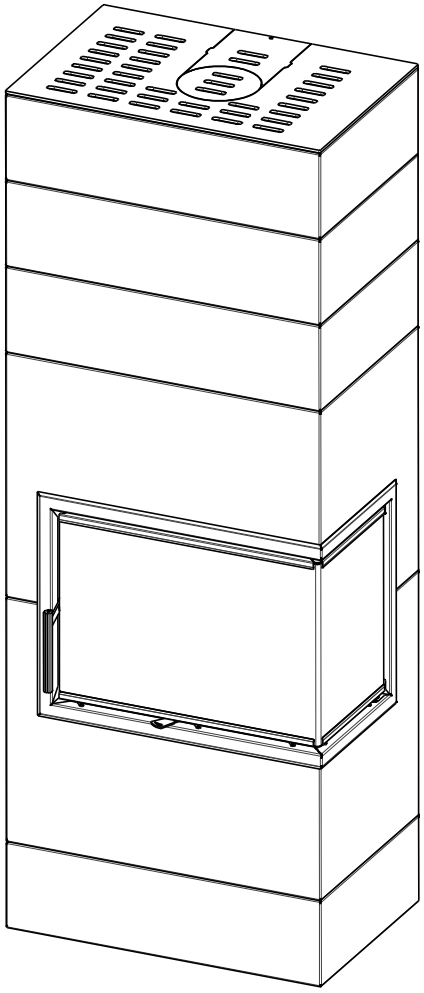

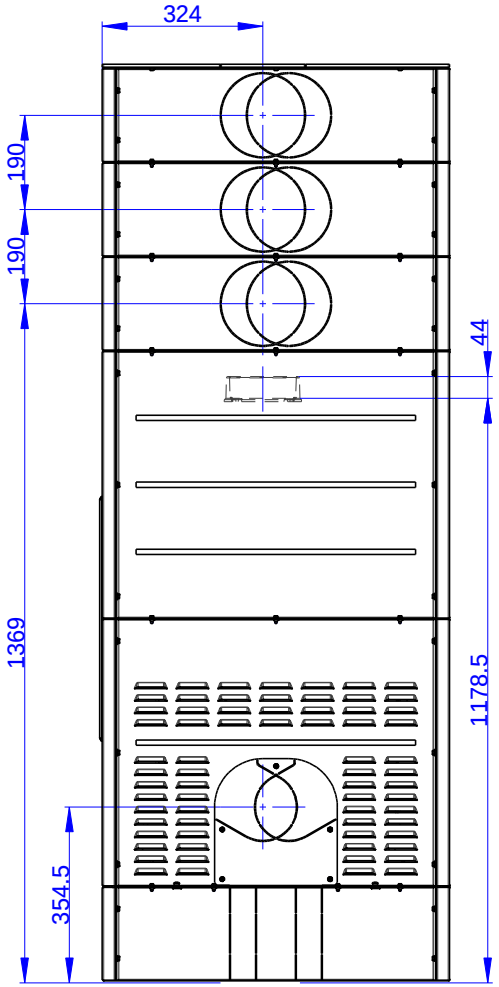

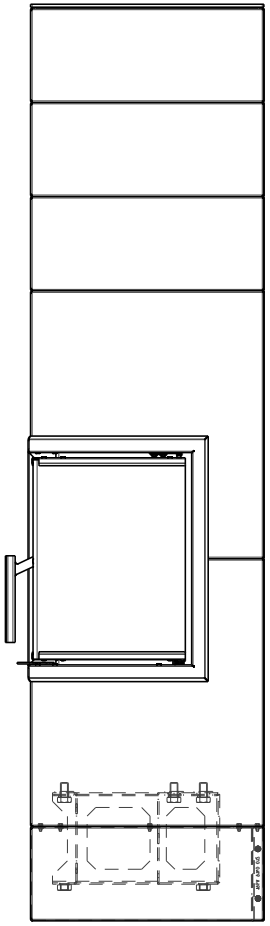

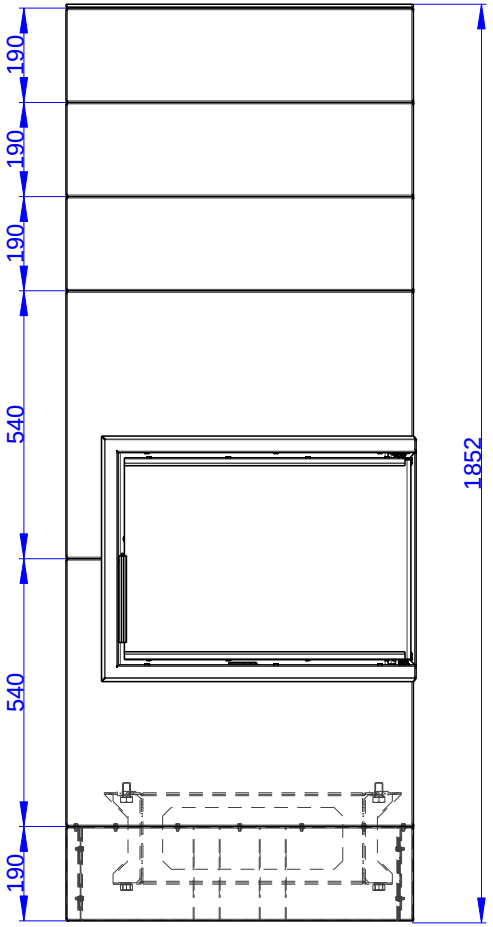

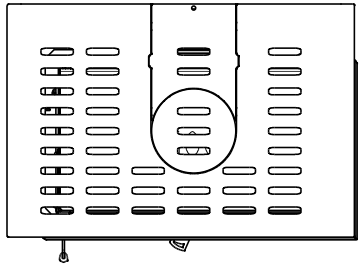

Rozmery v mm
Maße in mm
Dimensions in mm

VARIANT RN 03 + VARI RN 03 S1 + VARI RN 03 S2 + VARI RN 03 S3

210kg

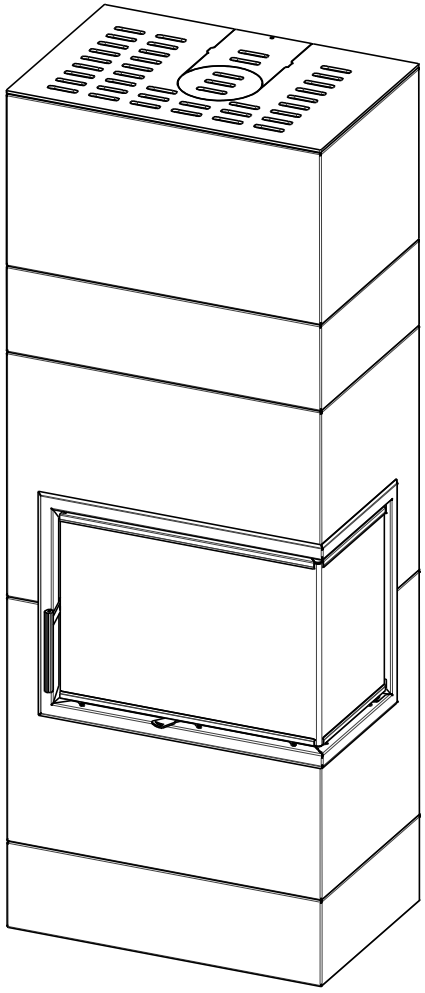

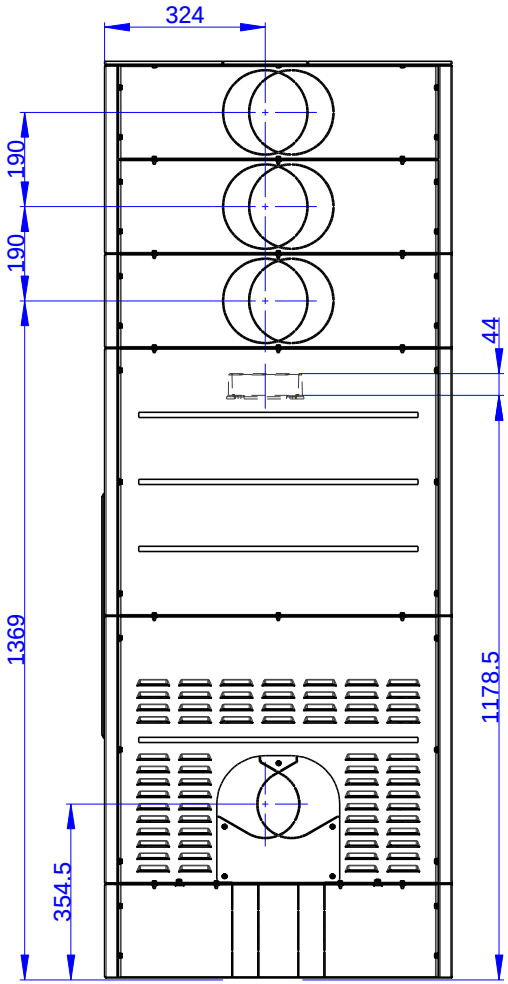

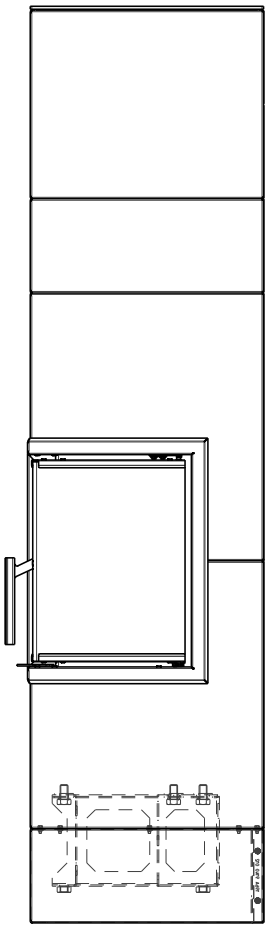

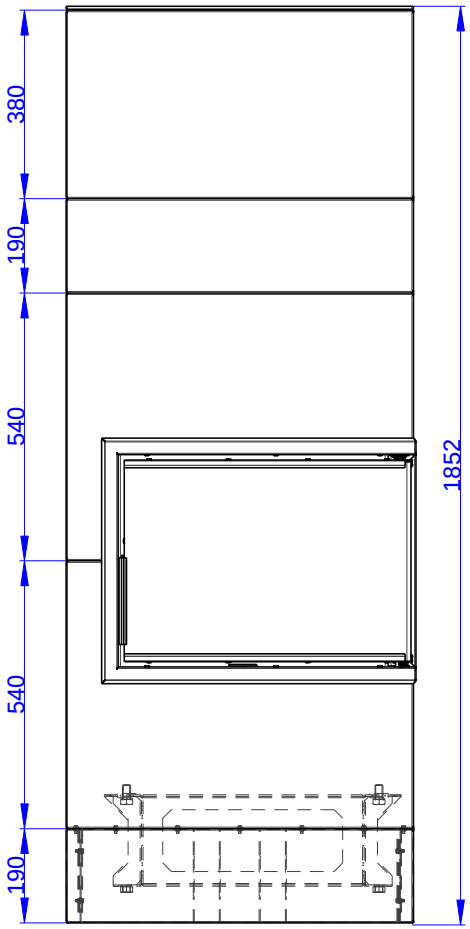

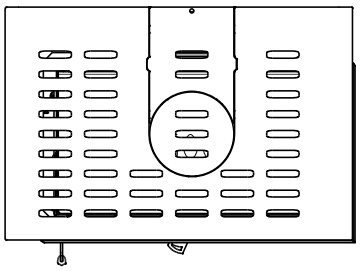

Rozmery v mm
Maße in mm
Dimensions in mm

VARIANT RN 03 + VARI RN 03 S1 + VARI RN 03 S2 + VARI RN 03 S3

210kg

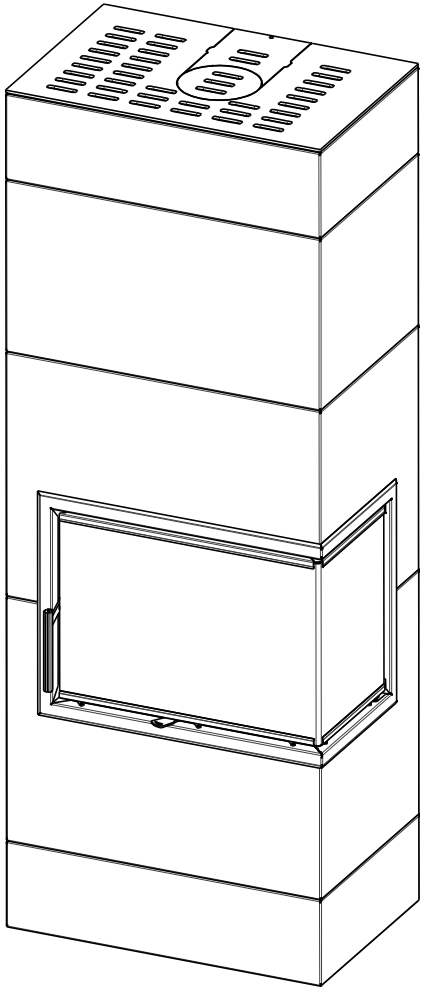

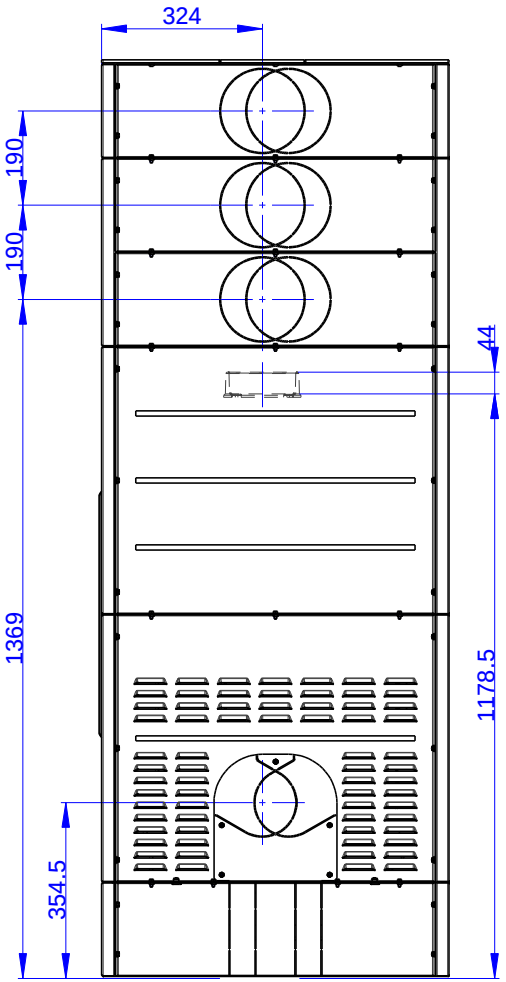

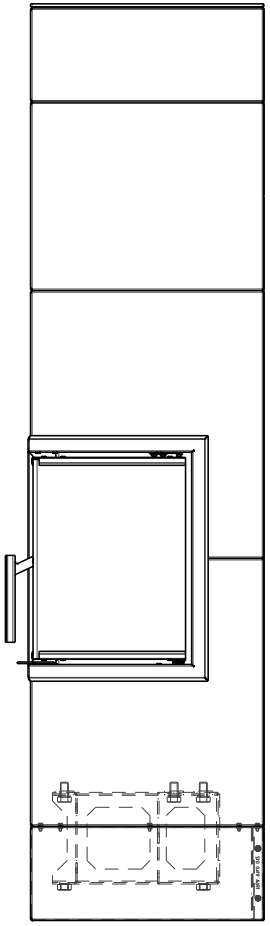

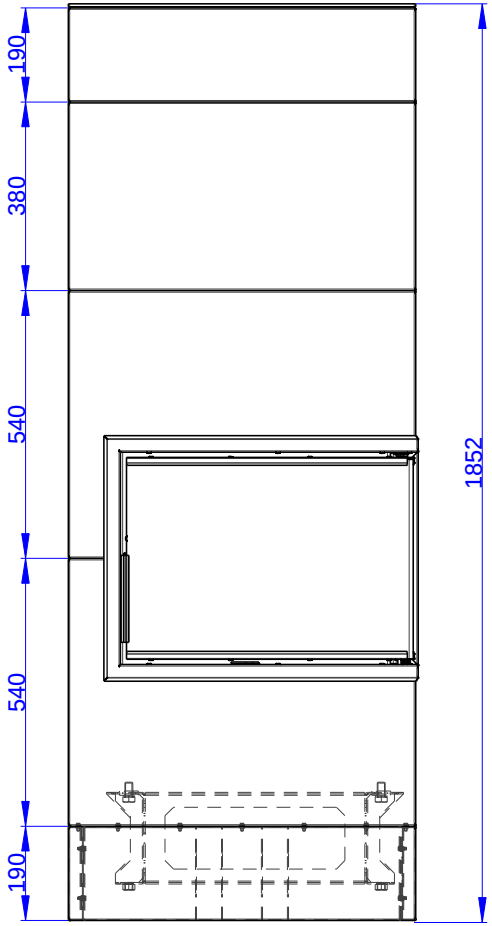

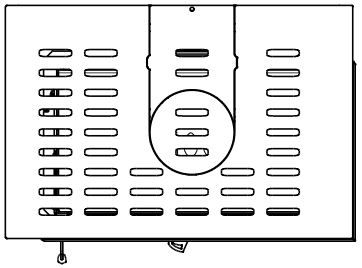

Rozmery v mm
Maße in mm
Dimensions in mm

VARIANT RN 03 + H2 AIRBOX 01

170kg

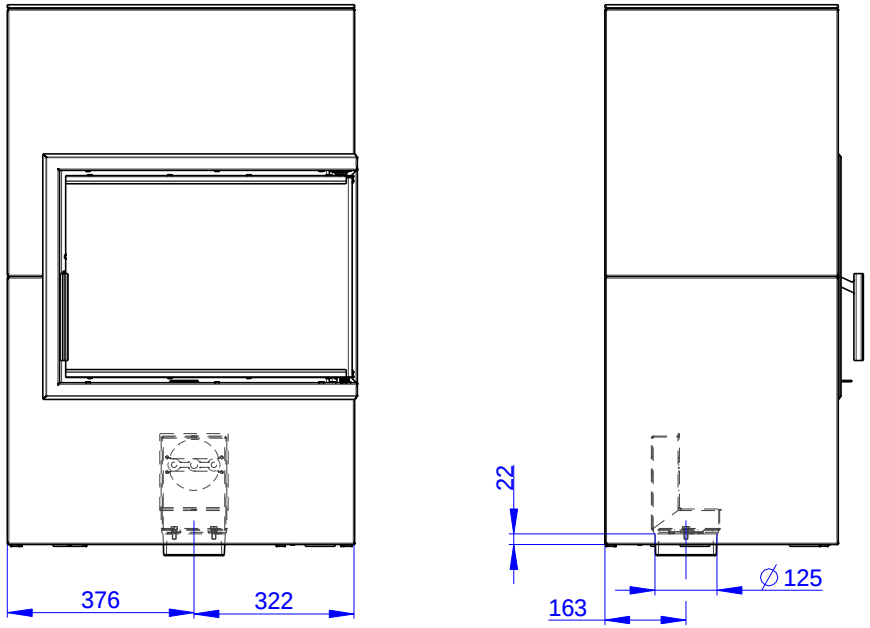

Rozmery v mm
Maße in mm
Dimensions in mm

VARIANT RN 03 + VARI RN 03 S3 + H2 AIRBOX 01

183kg

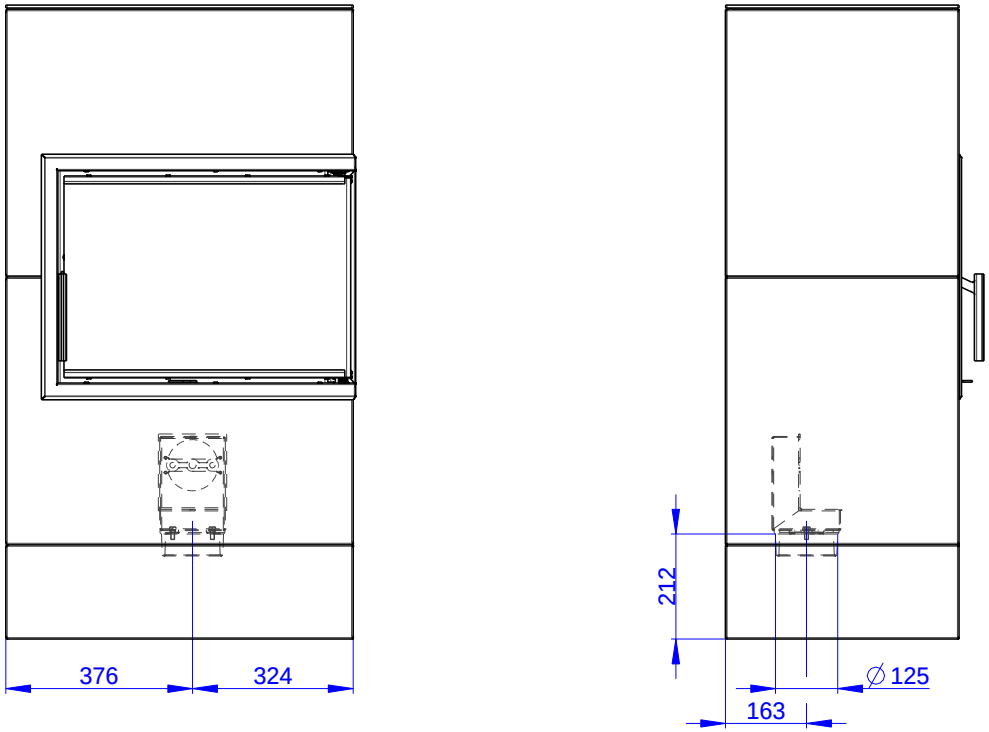

Rozmery v mm
Maße in mm
Dimensions in mm

VARIANT LN 03

170kg

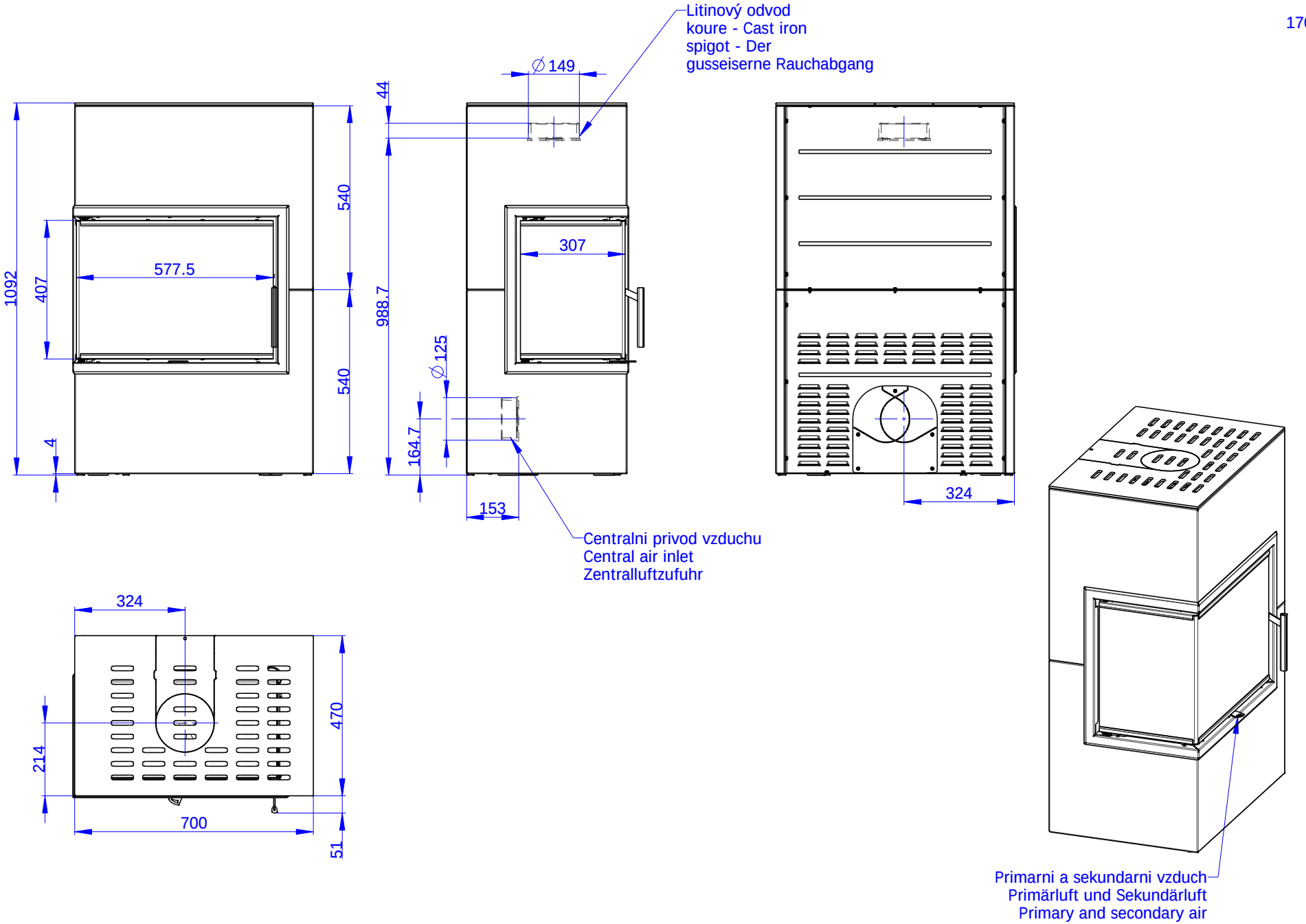

Rozmery v mm
Maße in mm
Dimensions in mm

VARIANT LN 03 + VARI RN 03 S1

179kg

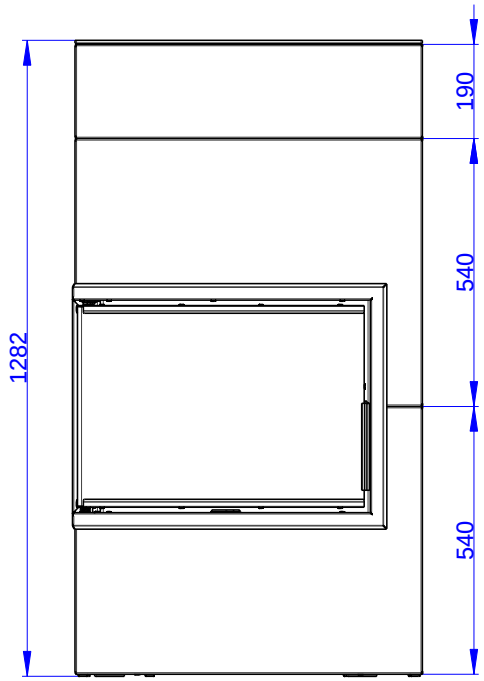

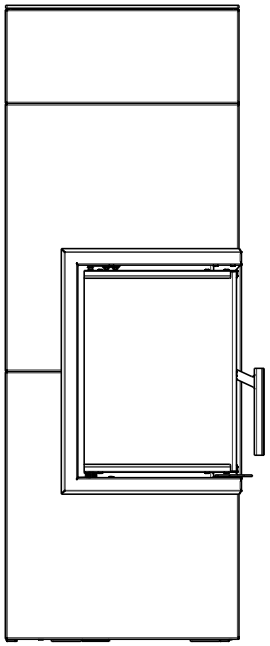

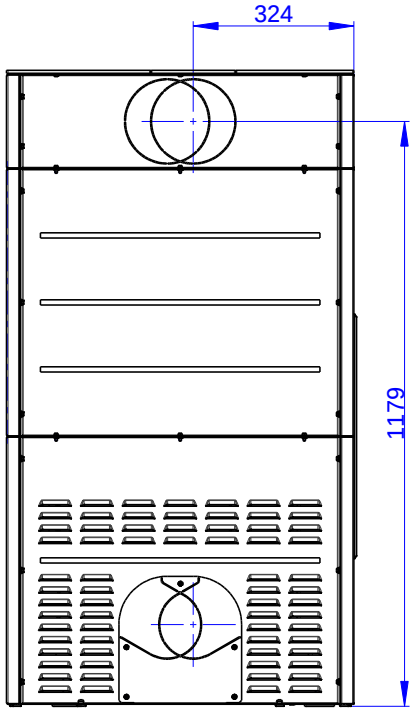

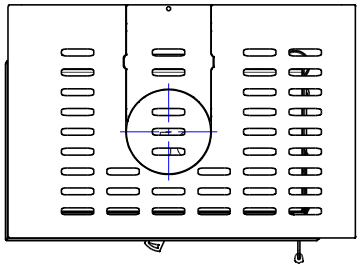

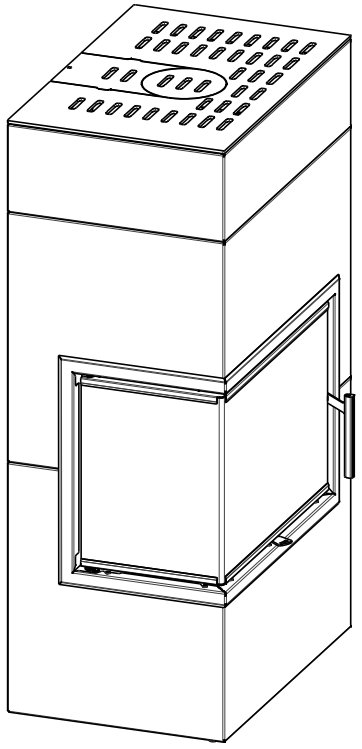

Rozmery v mm
Maße in mm
Dimensions in mm

VARIANT LN 03 + 2xVARI RN 03 S1

188kg

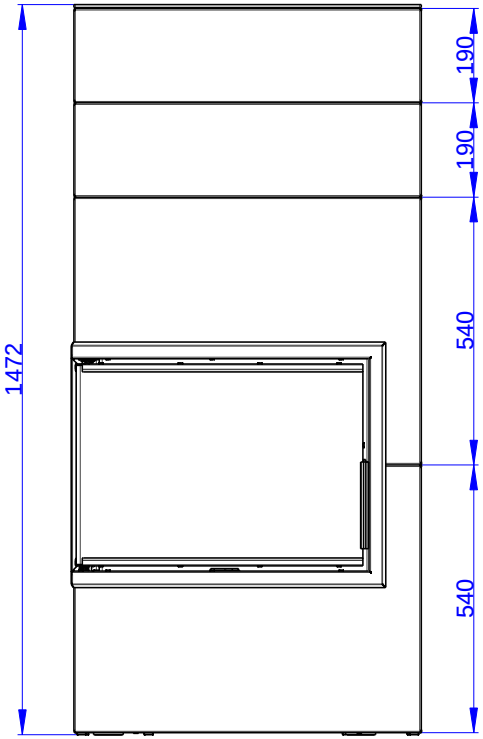

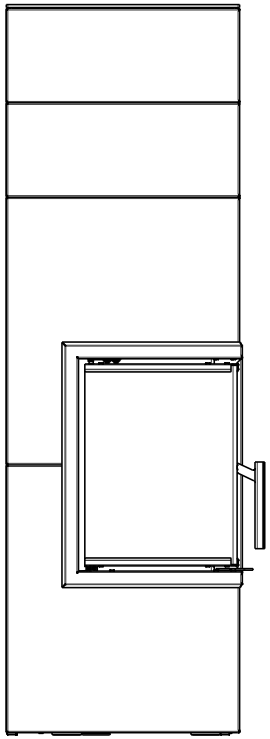

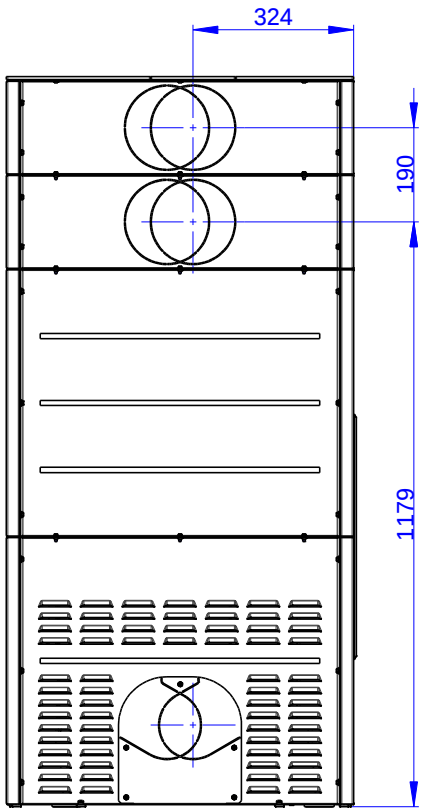

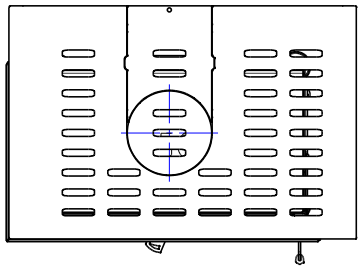

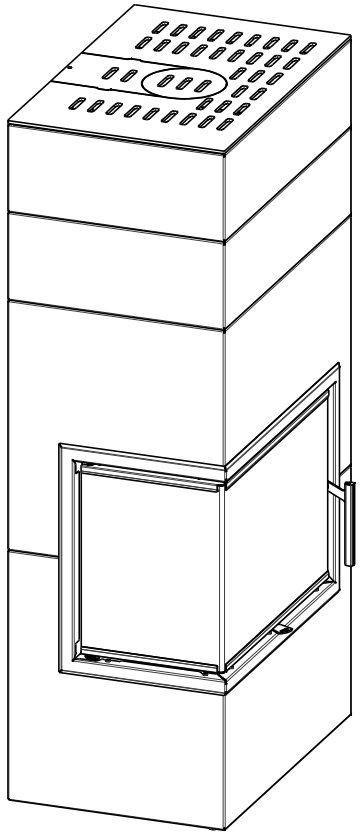

Rozmery v mm
Maße in mm
Dimensions in mm

VARIANT LN 03 + VARI RN 03 S2

187kg

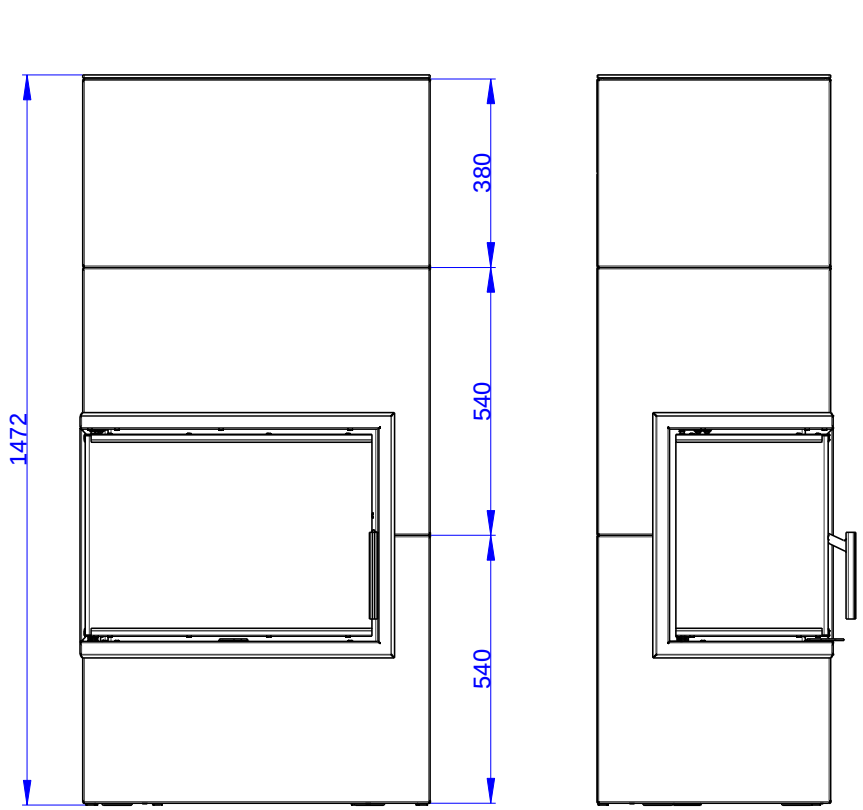

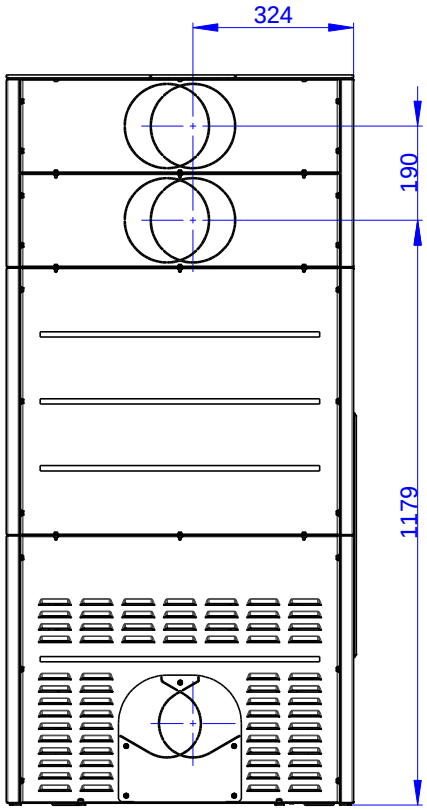

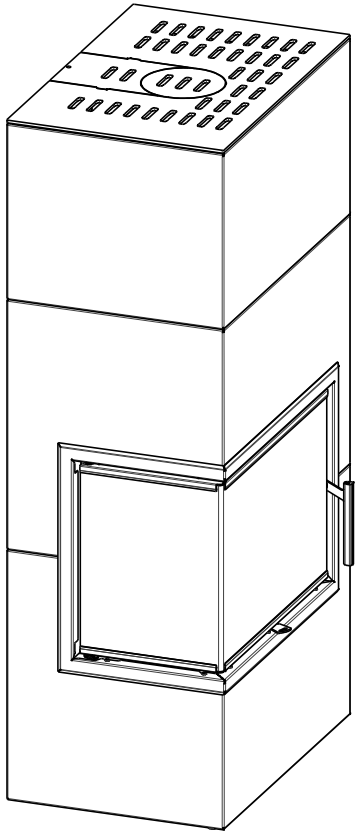

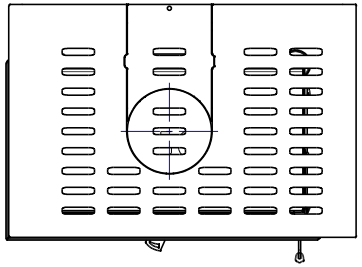

Rozmery v mm
Maße in mm
Dimensions in mm

VARIANT LN 03 + 3xVARI RN 03 S1

198kg

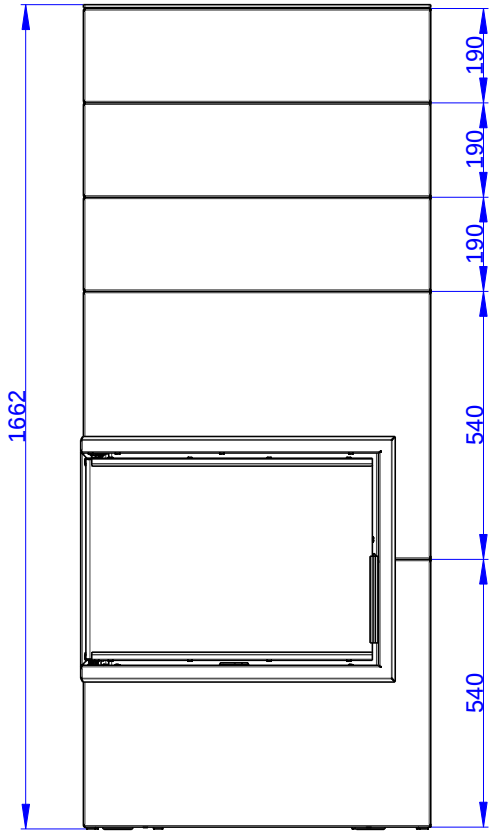

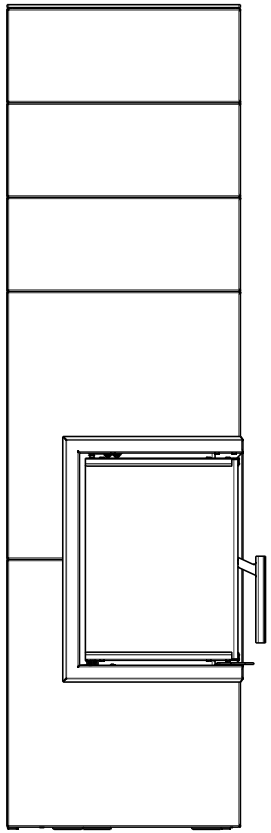

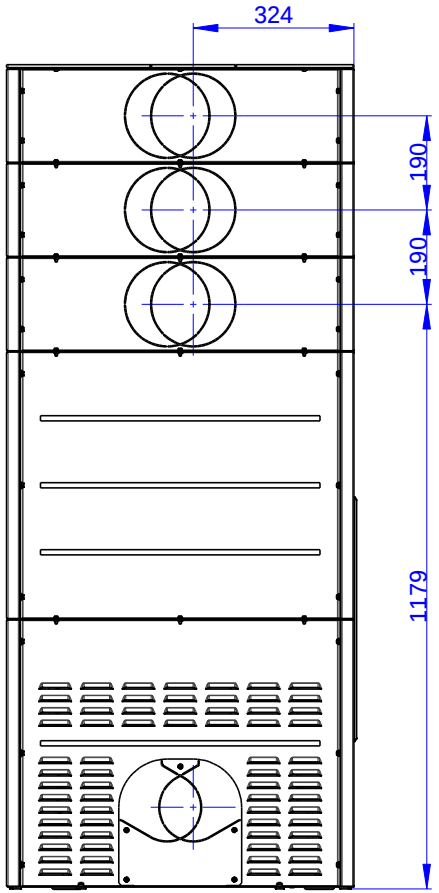

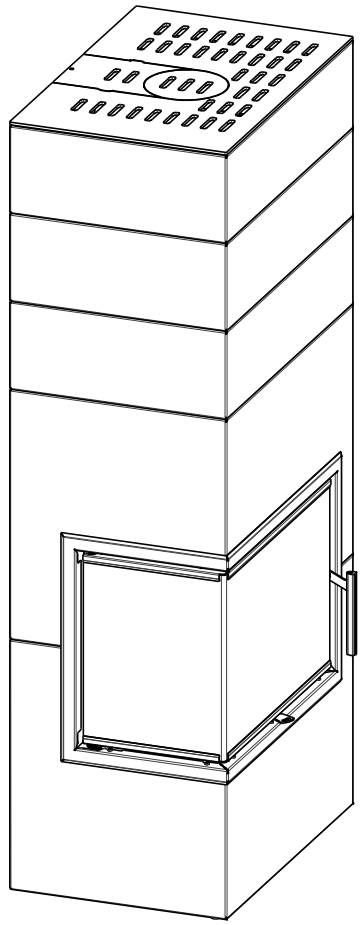

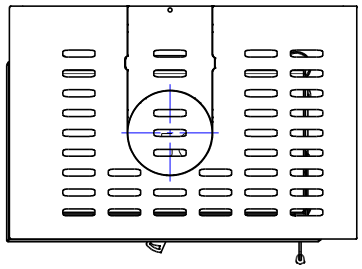

Rozmery v mm
Maße in mm
Dimensions in mm

VARIANT LN 03 + VARI RN 03 S1 + VARI RN 03 S2

196kg

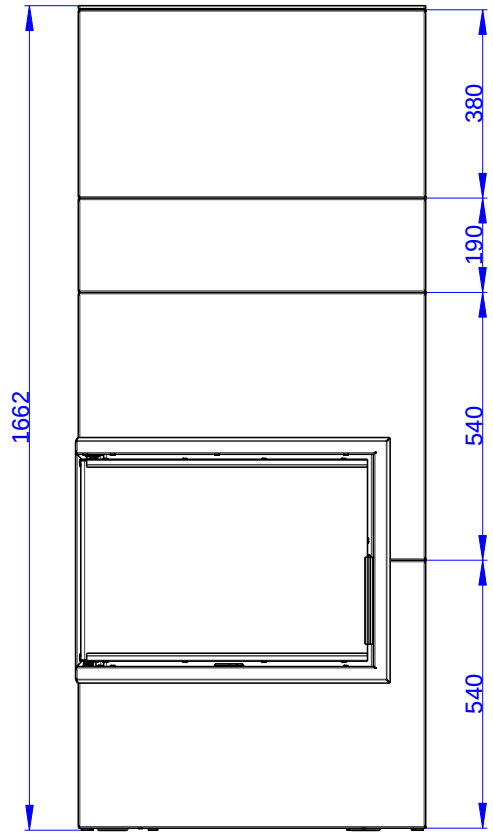

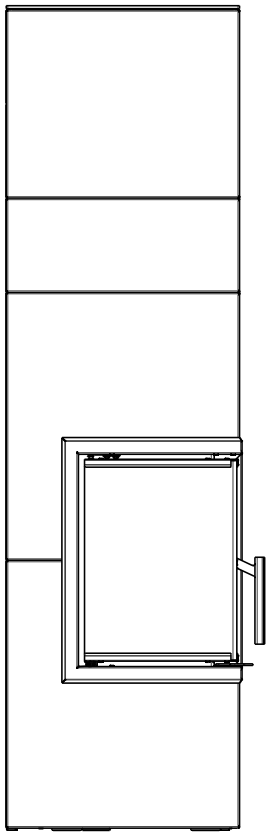

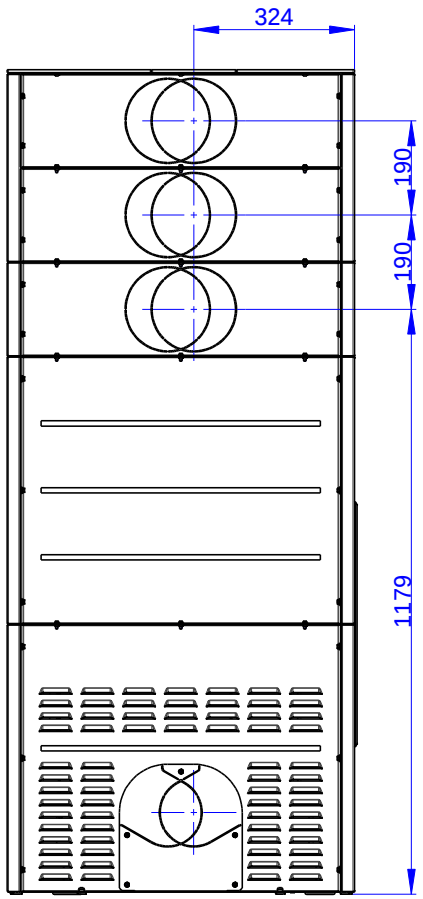

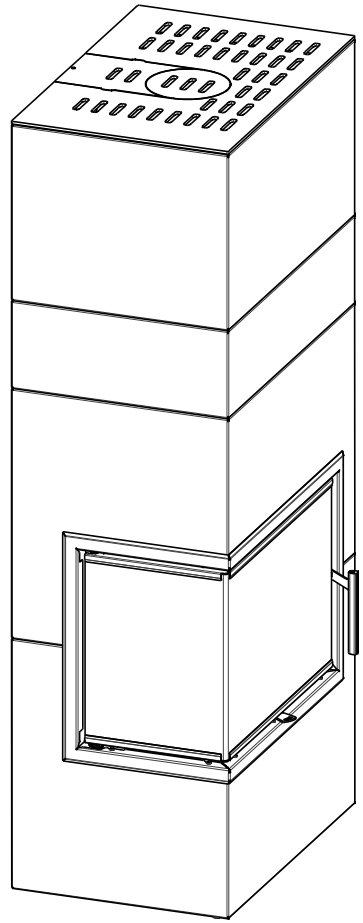

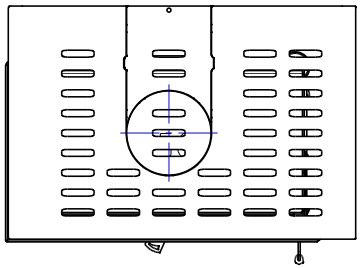

Rozmery v mm
Maße in mm
Dimensions in mm

VARIANT LN 03 + VARI RN 03 S2 + VARI RN 03 S1

196kg

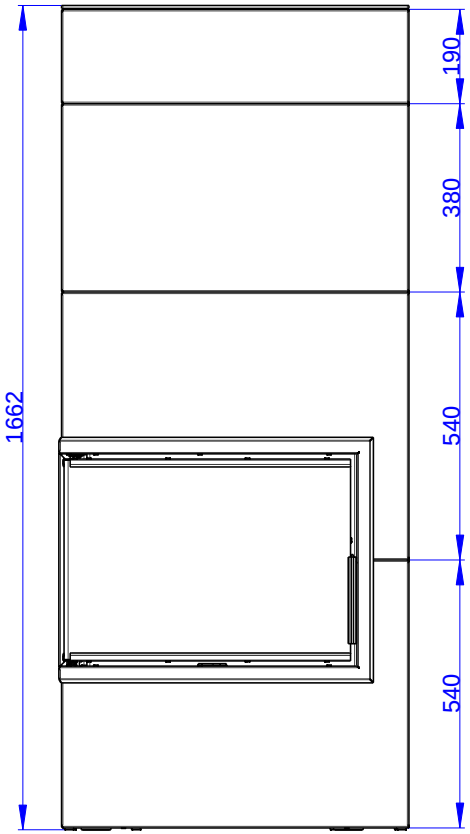

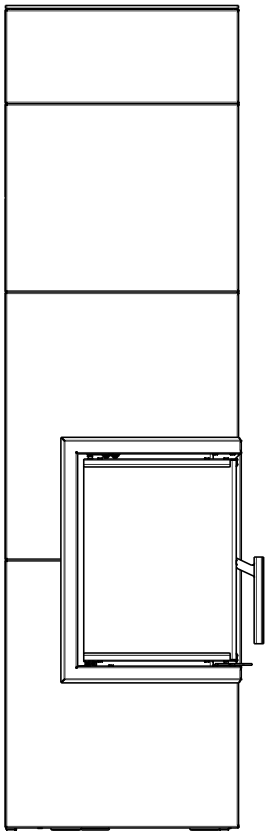

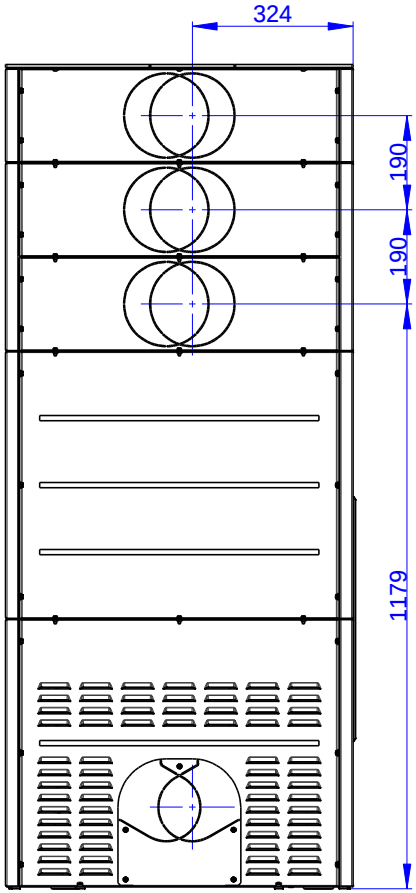

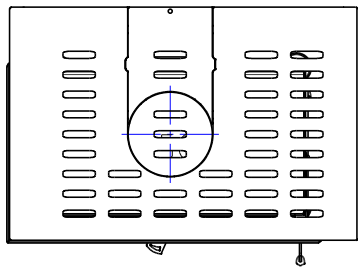

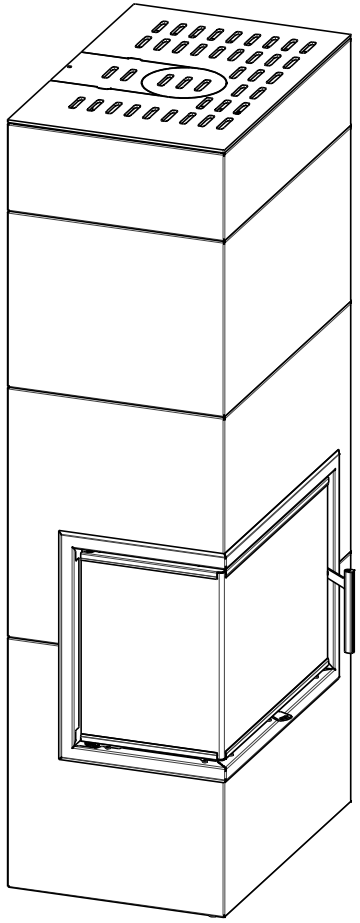

Rozmery v mm
Maße in mm
Dimensions in mm

VARIANT LN 03 + VARI RN 03 S3

183kg

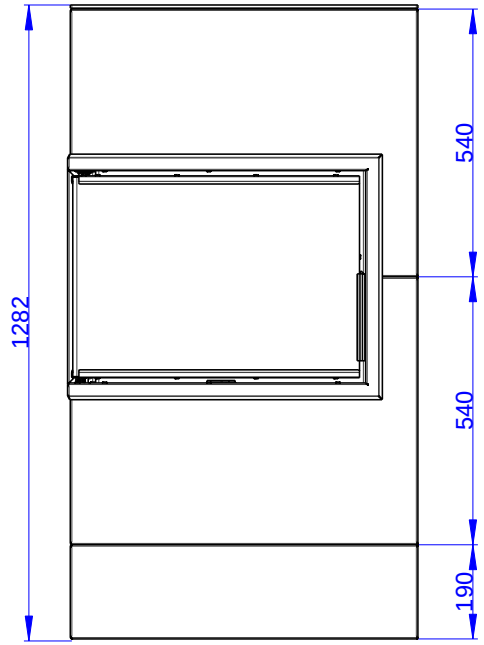

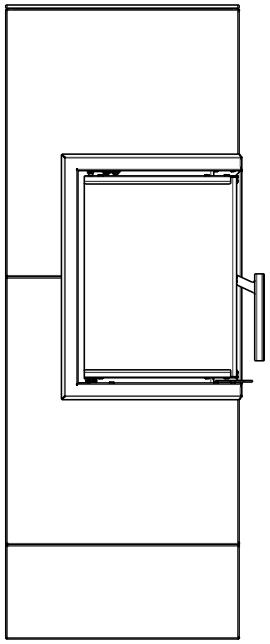

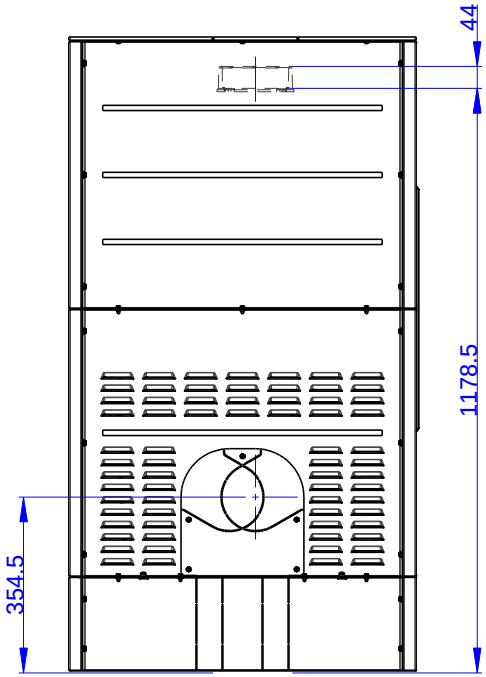

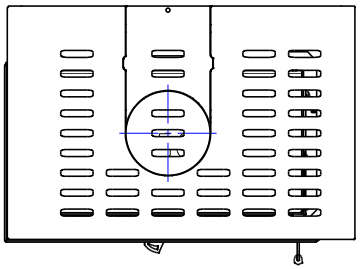

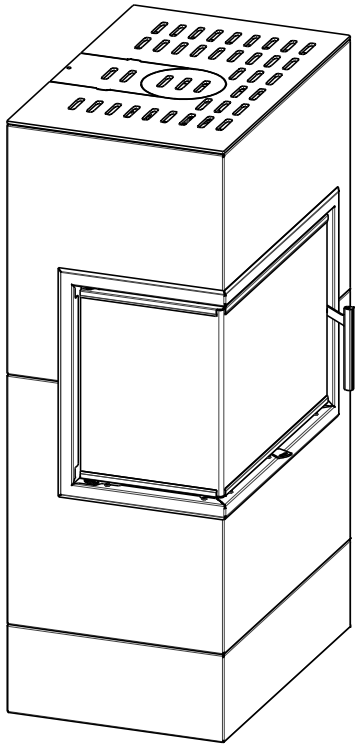

Rozmery v mm
Maße in mm
Dimensions in mm

VARIANT LN 03
+ VARI RN 03 S1 + VARI RN 03 S3

192kg

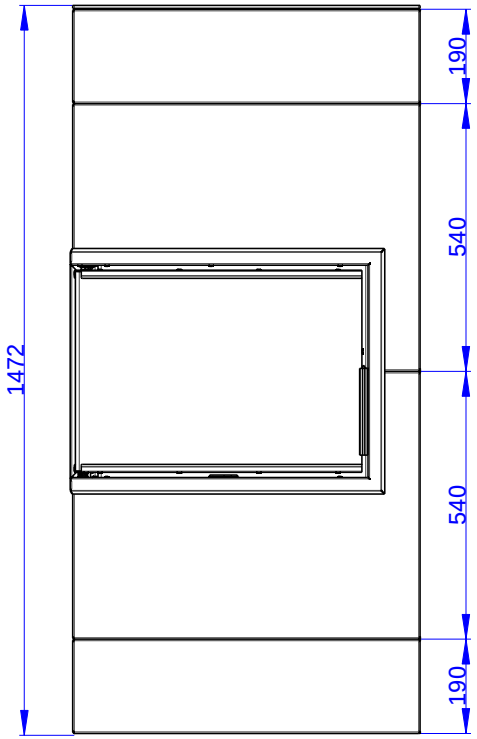

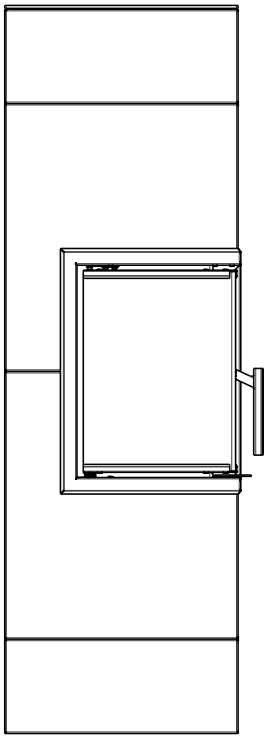

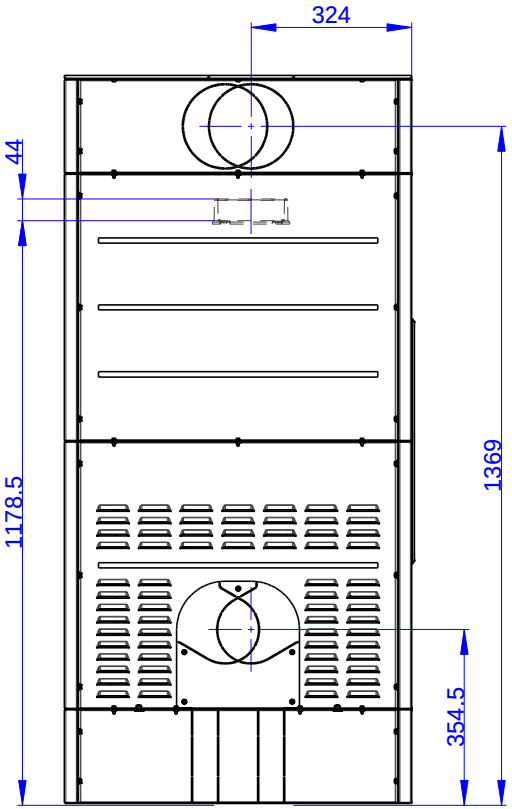

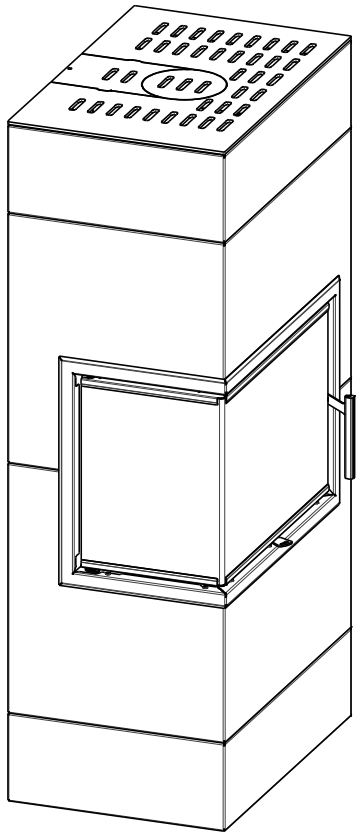

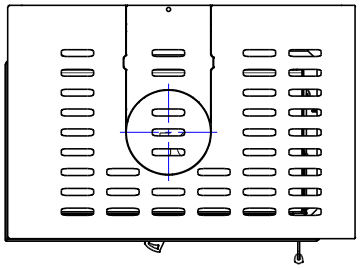

Rozmery v mm
Maße in mm
Dimensions in mm

VARIANT LN 03
+ 2xVARI RN 03 S1 + VARI RN 03 S3

202kg

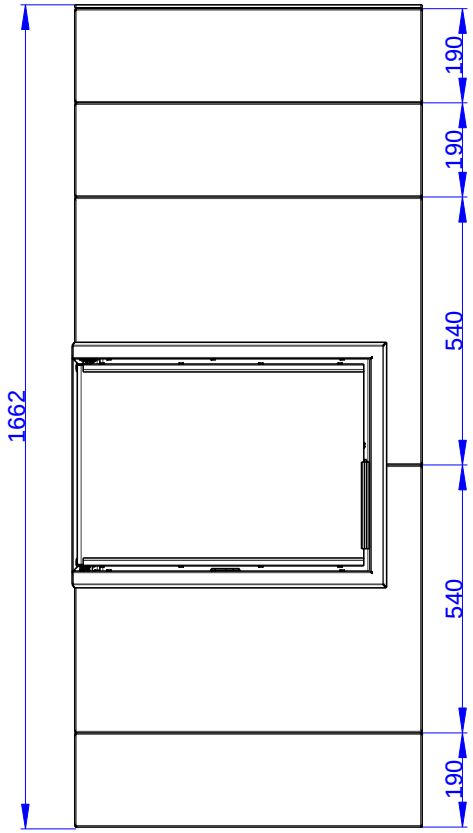

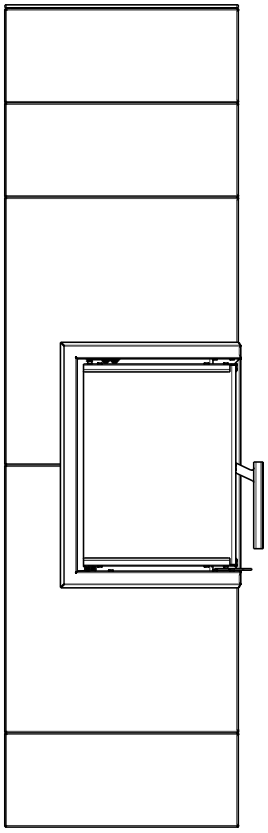

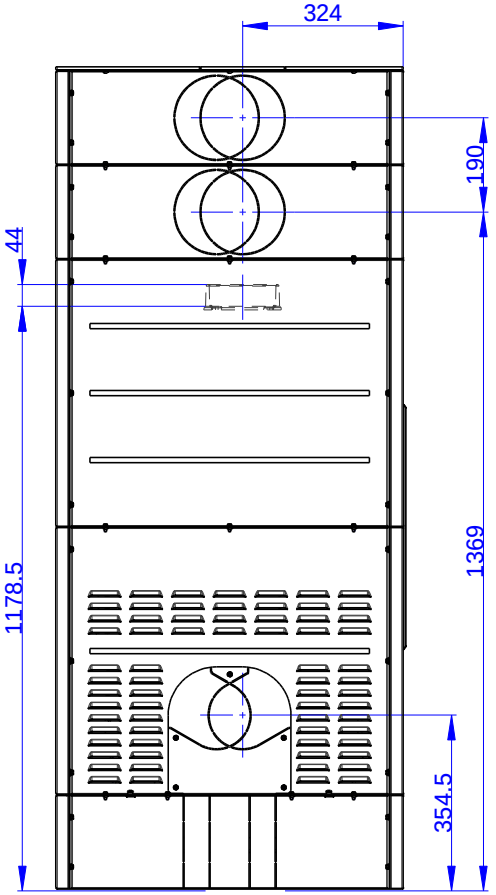

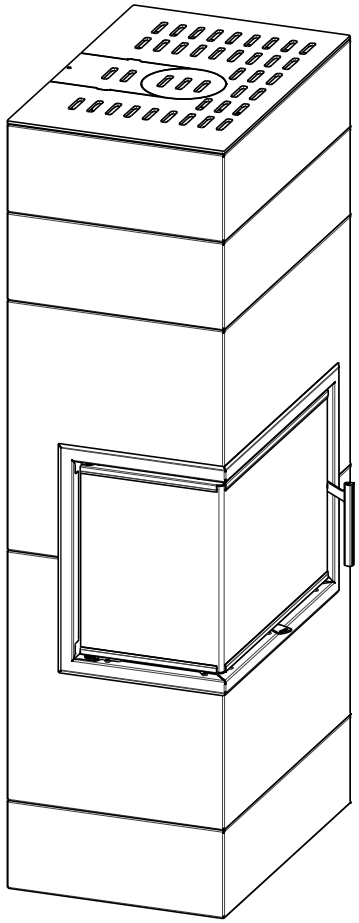

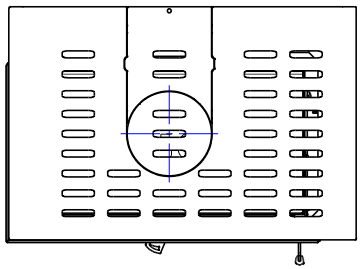

Rozmery v mm
Maße in mm
Dimensions in mm

VARIANT LN 03
+ VARI RN 03 S2 + VARI RN 03 S3

200kg

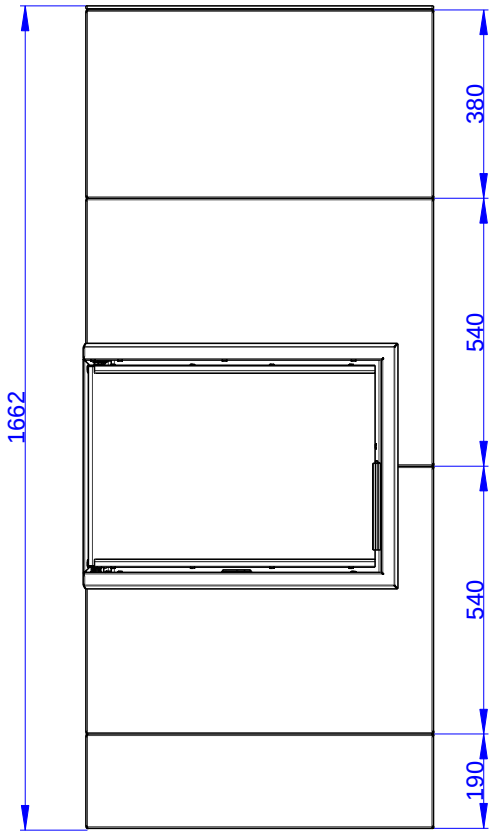

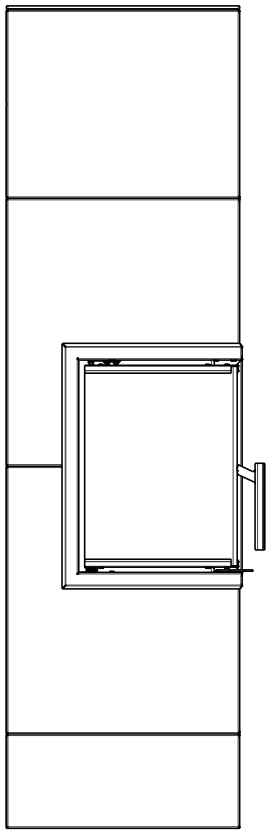

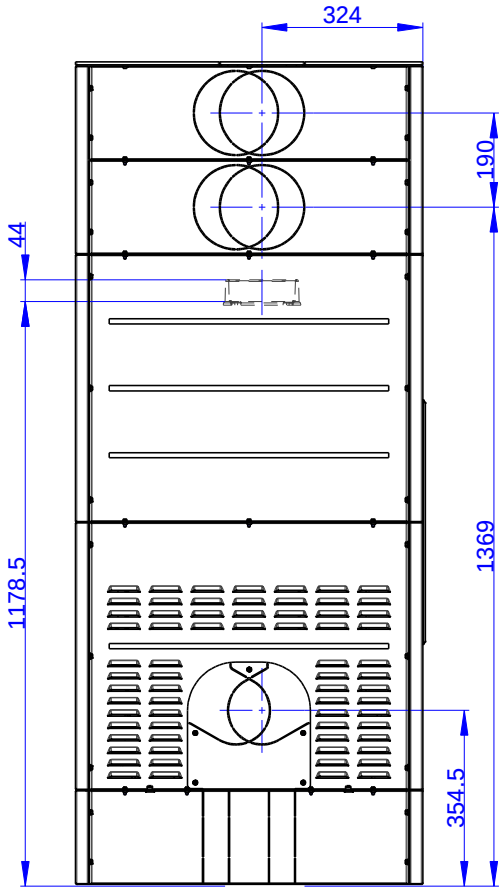

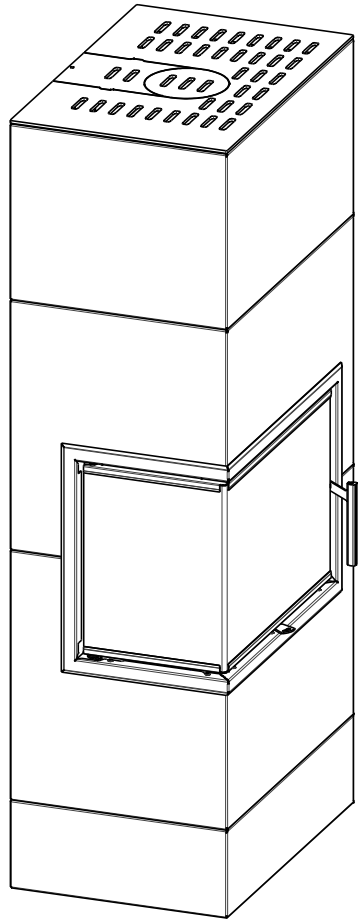

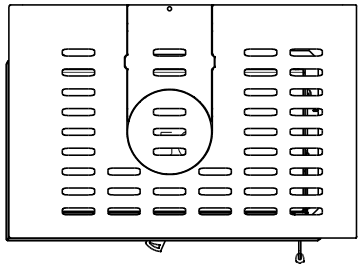

Rozmery v mm
Maße in mm
Dimensions in mm

VARIANT LN 03
+ 3xVARI RN 03 S2 + VARI RN 03 S3

211kg

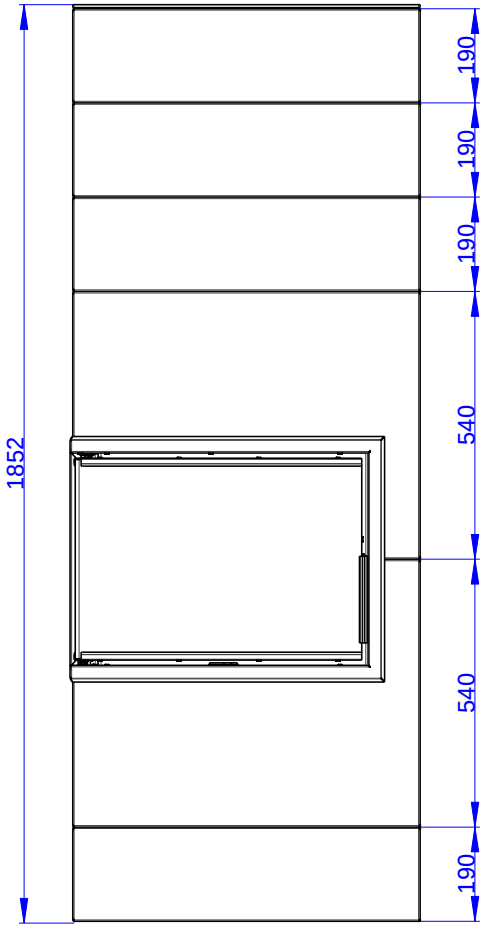

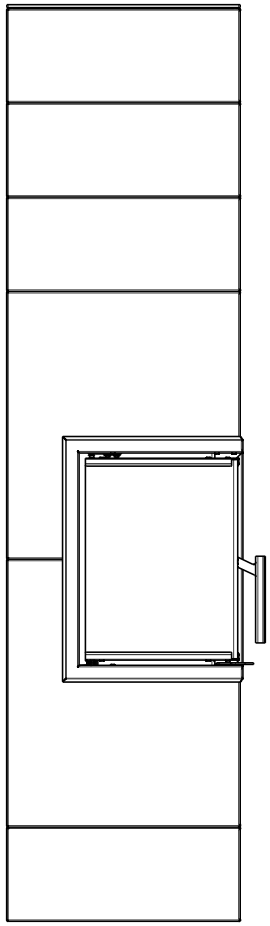

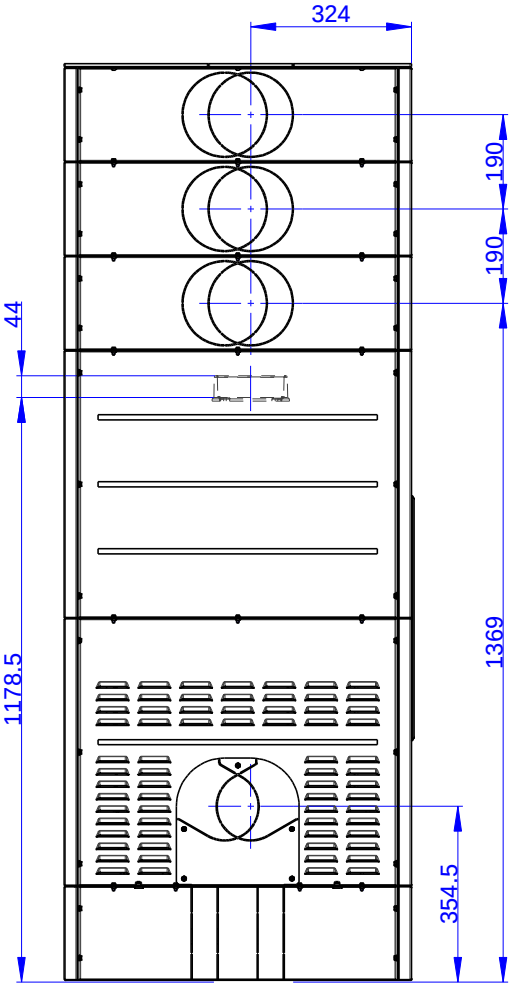

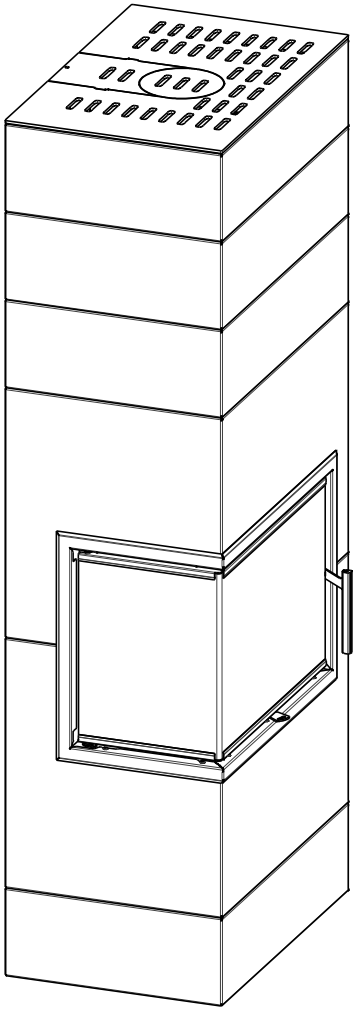

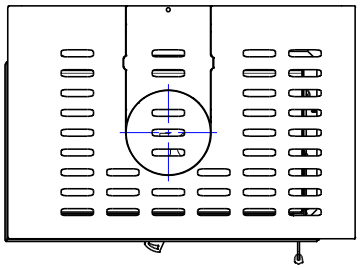

Rozmery v mm
Maße in mm
Dimensions in mm

VARIANT LN 03 + VARI RN 03 S1 + VARI RN 03 S2 + VARI RN 03 S3

210kg

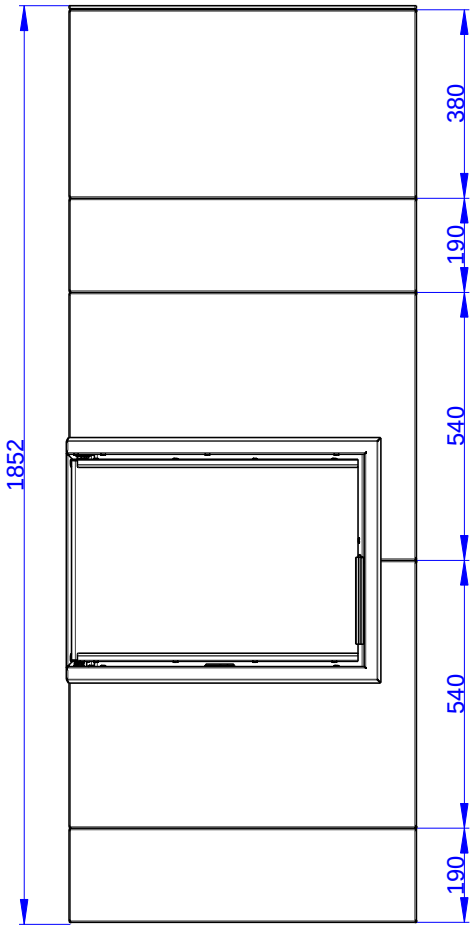

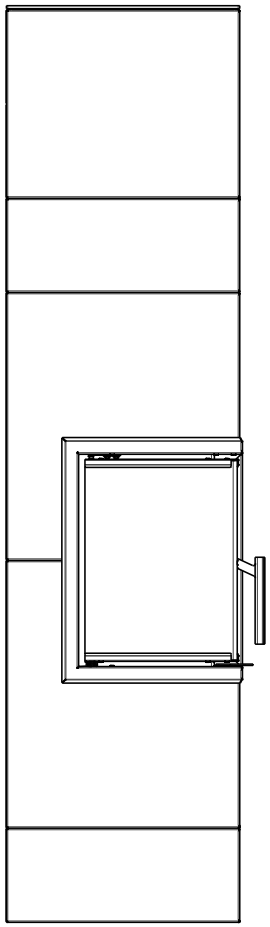

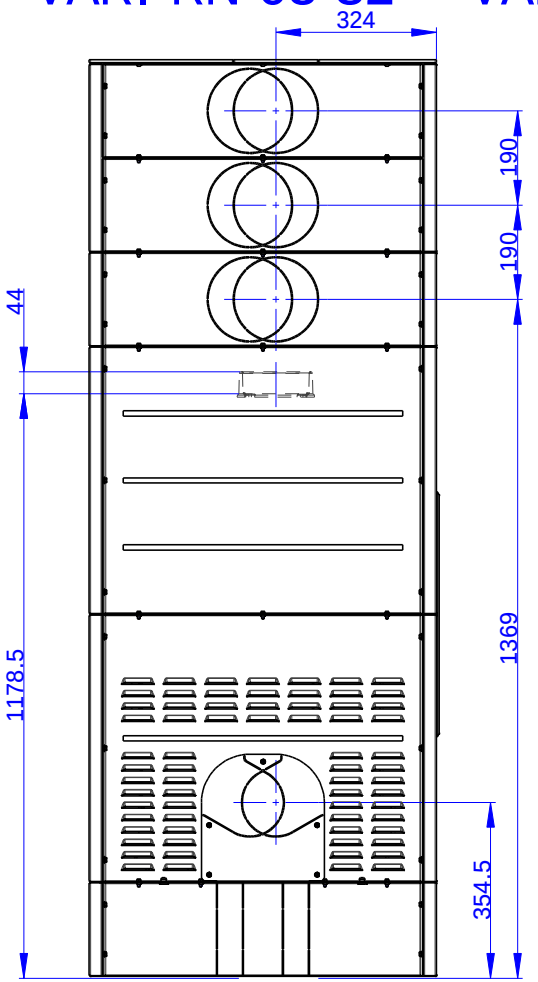

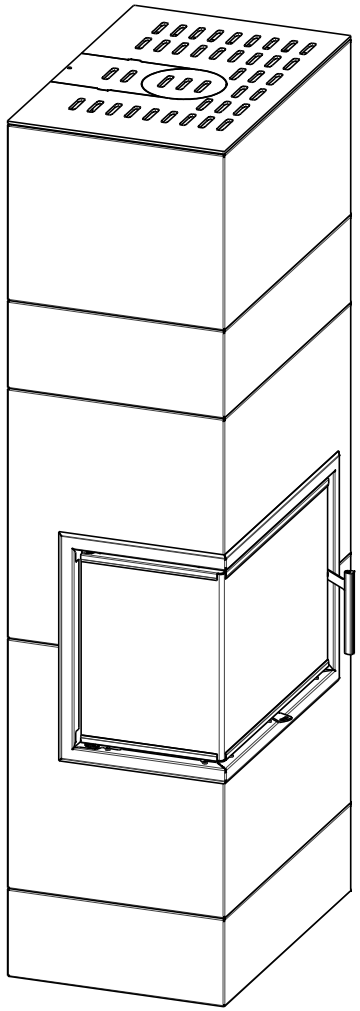

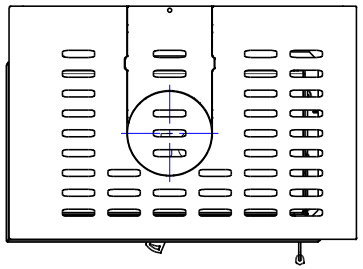

Rozmery v mm
Maße in mm
Dimensions in mm

VARIANT LN 03 + VARI RN 03 S1 + VARI RN 03 S2 + VARI RN 03 S3

210kg

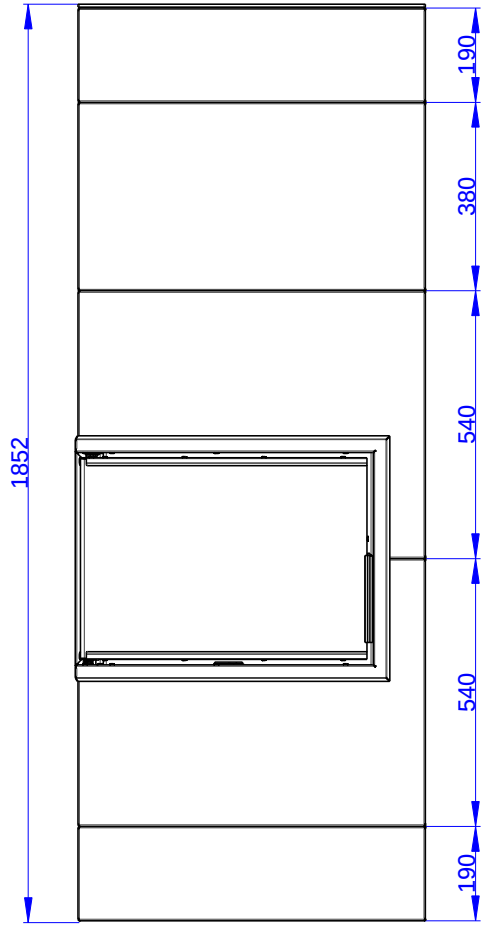

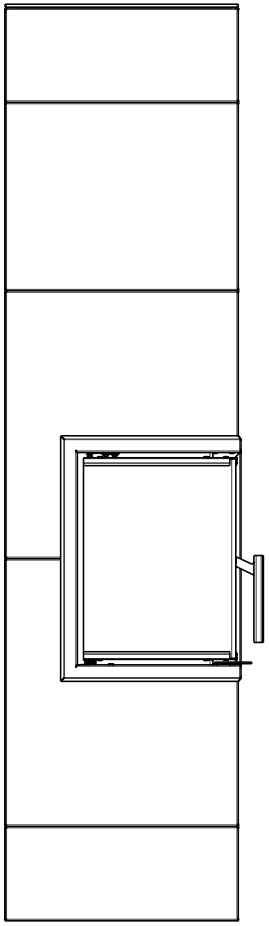

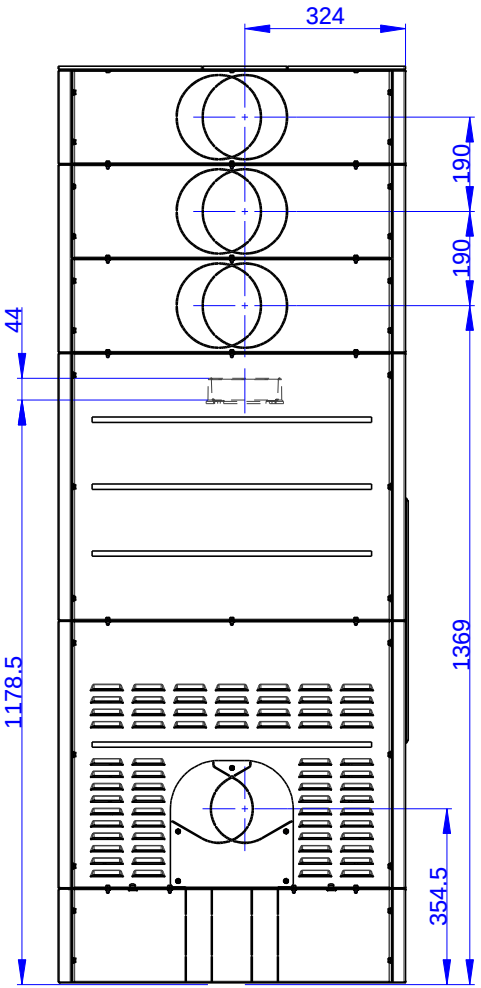

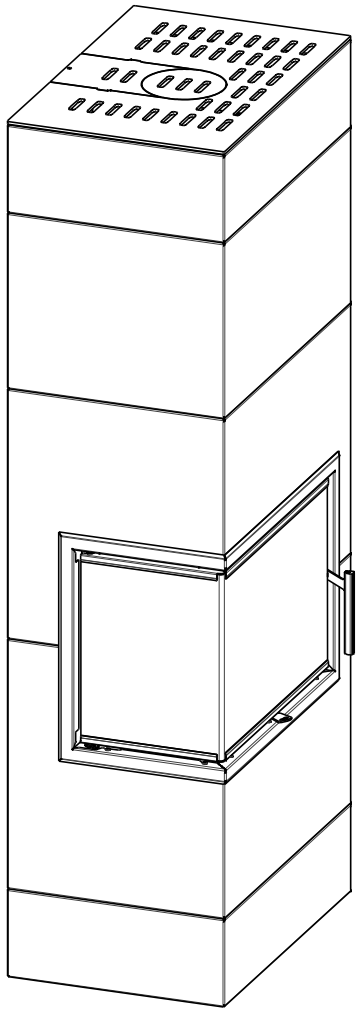

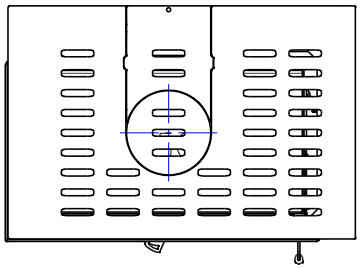

Rozmery v mm
Maße in mm
Dimensions in mm

VARIANT LN 03 + H2 AIRBOX 01

170kg

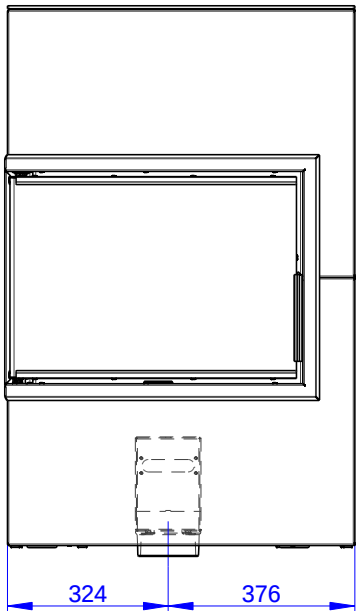

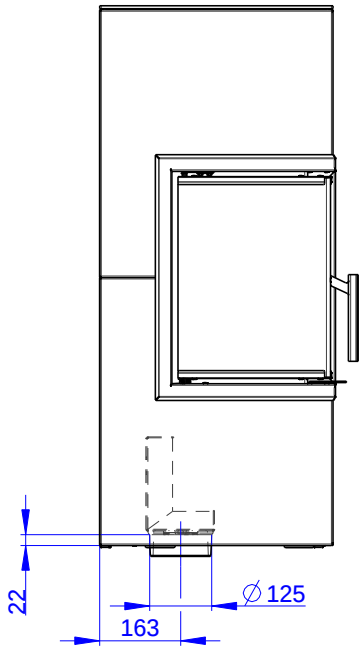

Rozmery v mm
Maße in mm
Dimensions in mm

VARIANT LN 03 + VARI RN 03 S3 + H2 AIRBOX 01
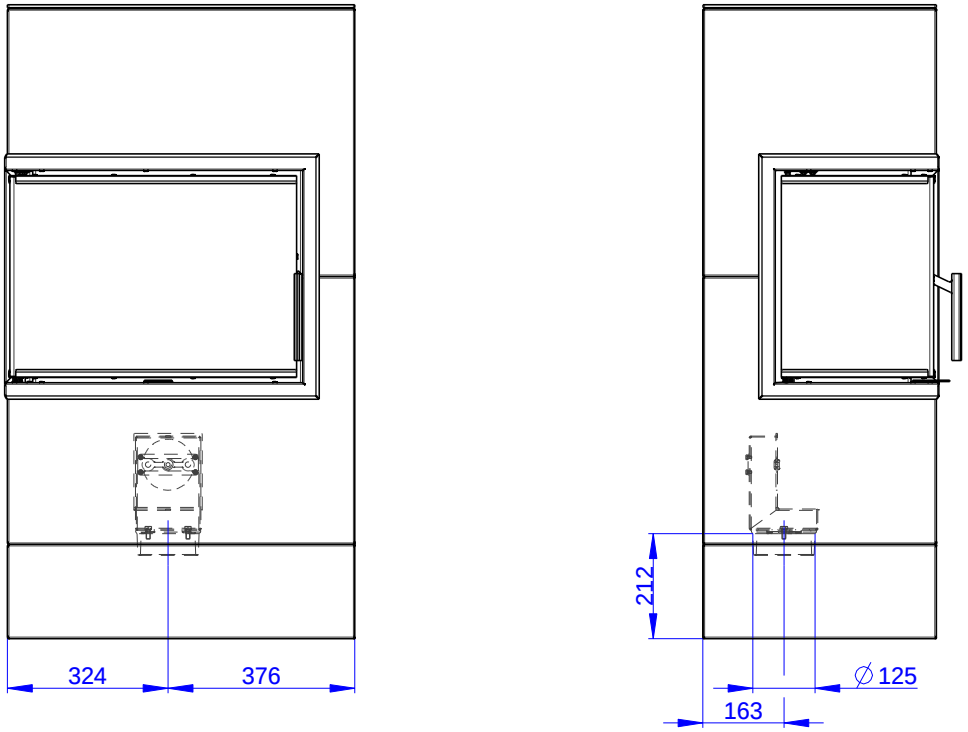
183kg