Romotop®

Heat T 3g L 88.50.01 (04)

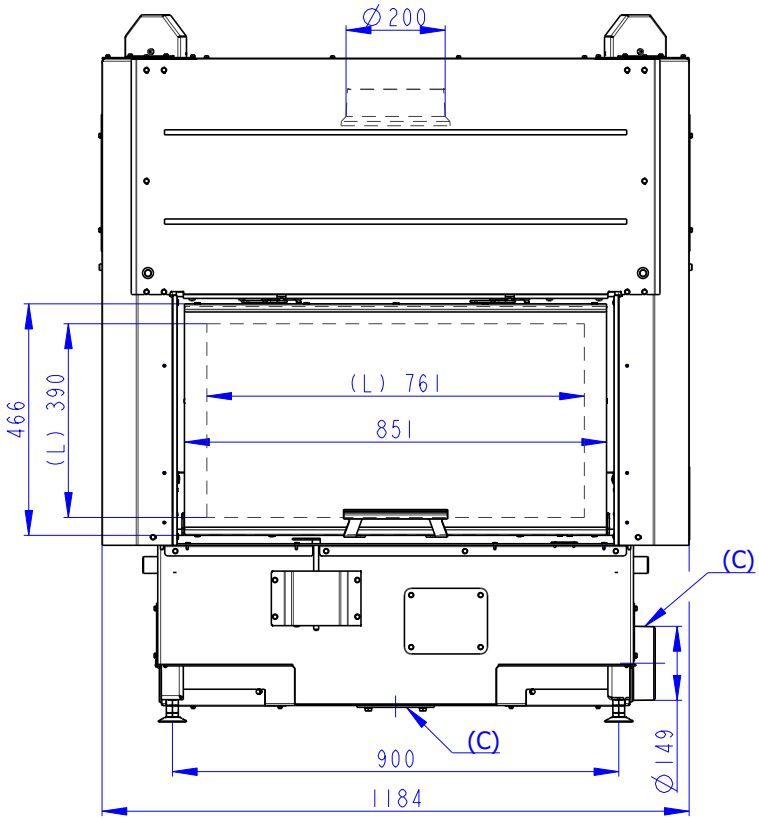

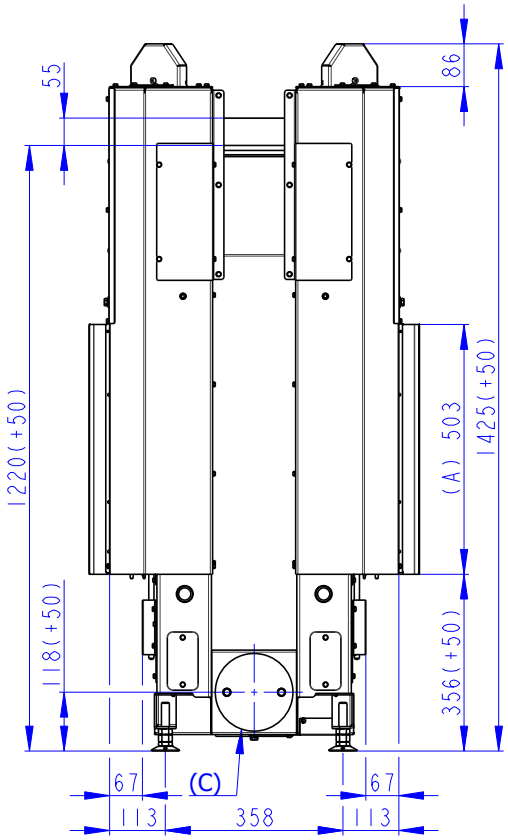

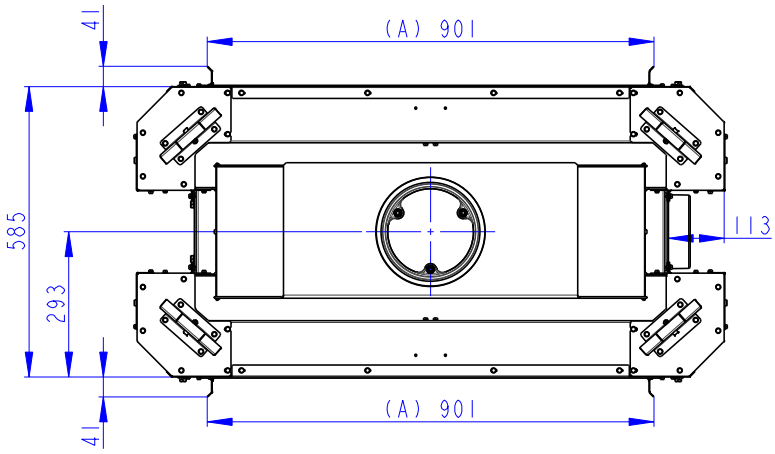

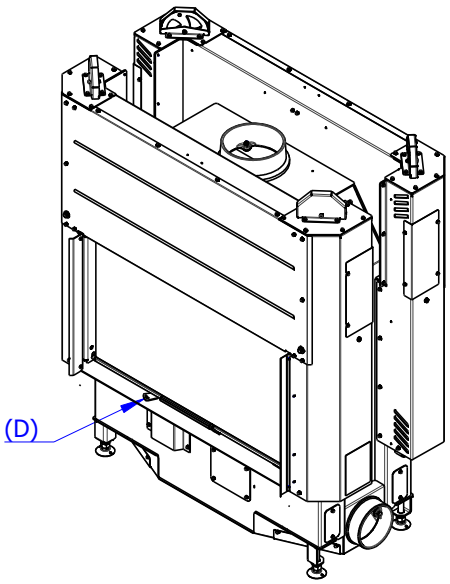

(A) Zastavbovy rozmer / In-built dimension / Baumaße
(B) Litinový odvod koure / Cast iron spigot / Der gusseiserne Rauchabgang
(C) Centralni privod vzduchu / Central air inlet / Zentralluftzufuhr
(D) Primarni a sekundarni vzduch / Primary and secondary air / Primärluft und Sekundärluft
(L) Volna plocha proskleni / Free glass area / Freie Glassichtfläche

Romotop®

Heat T 3g L 88.50.01 (04) + AKKUM KV 04

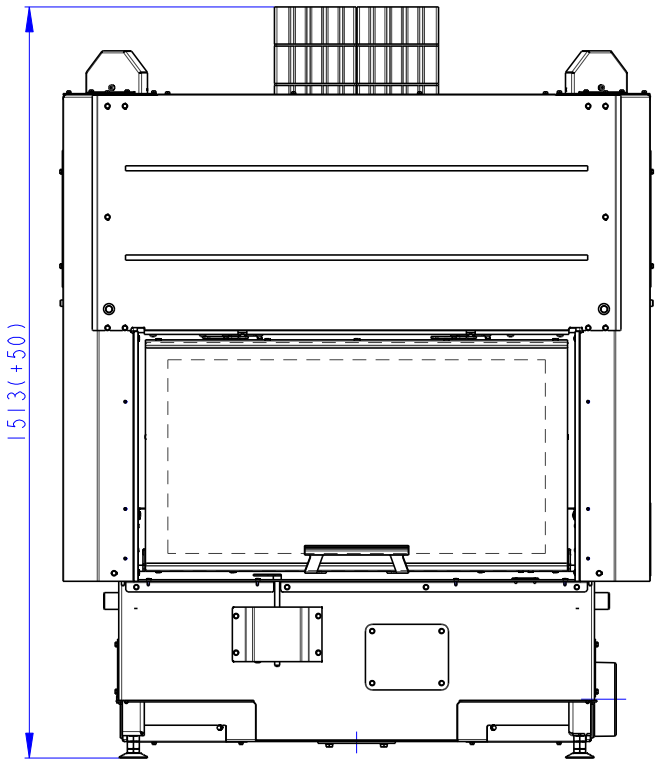

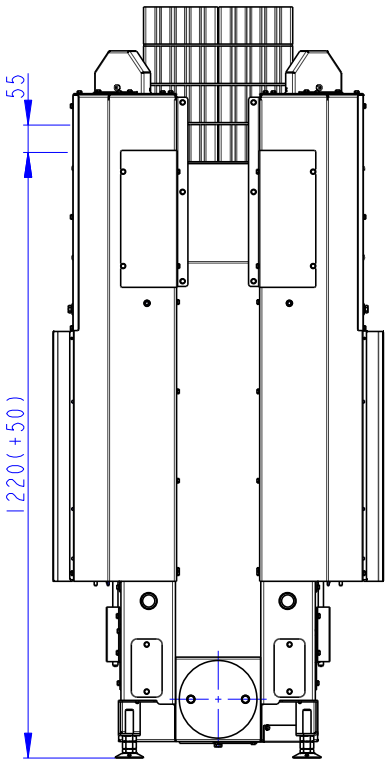

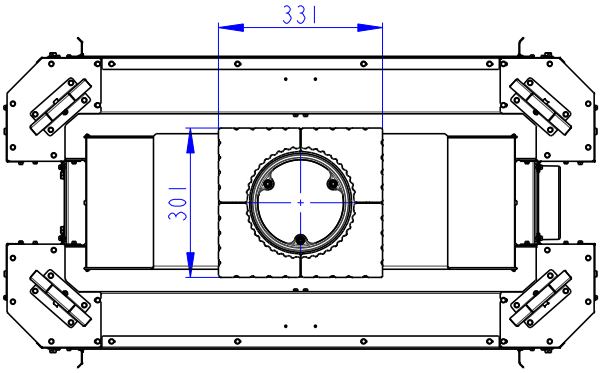

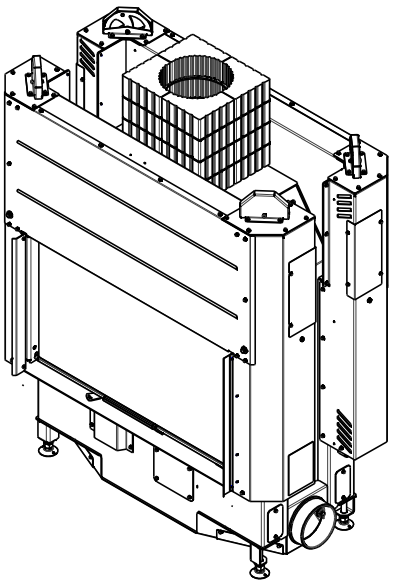

Romotop®

Heat T 3g L 88.50.01 (04) + H3LF RAM11 (2x)

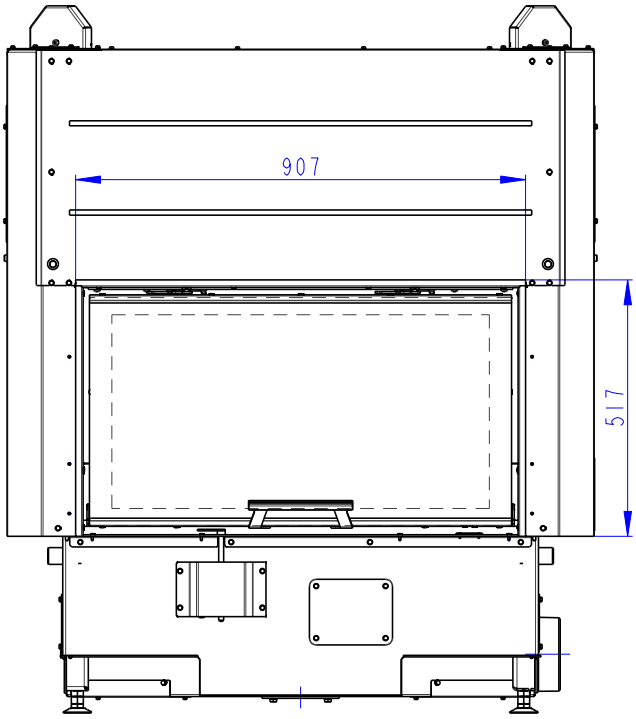

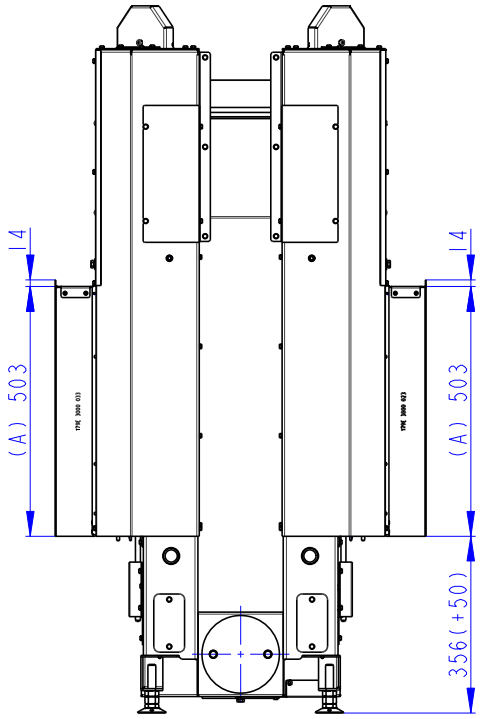

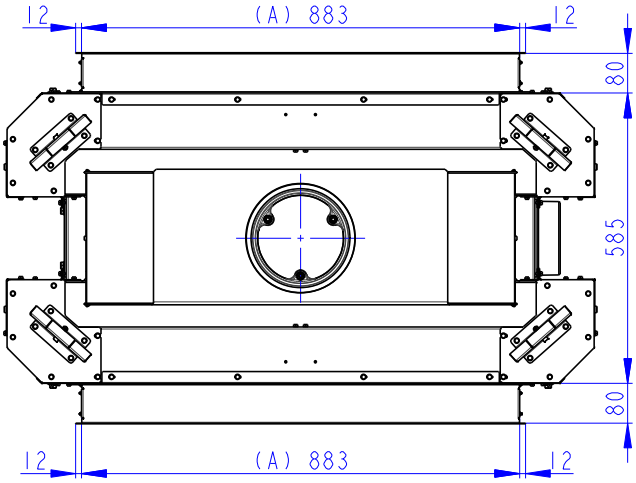

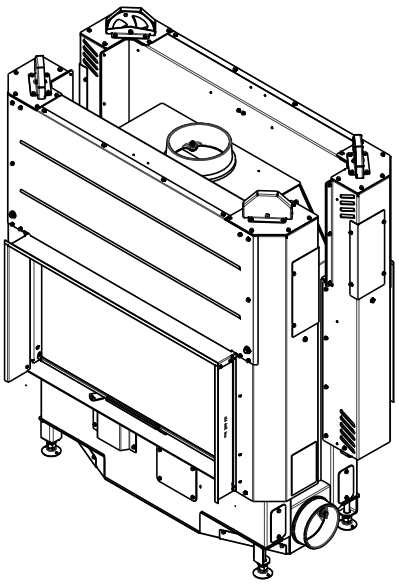

Romotop®

Heat T 3g L 88.50.01 (04) + H3LF RAM12 (2x)

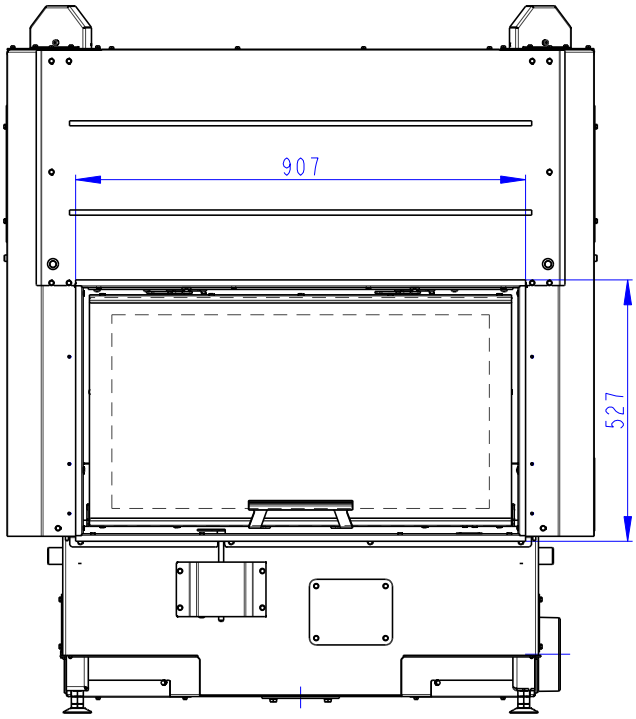

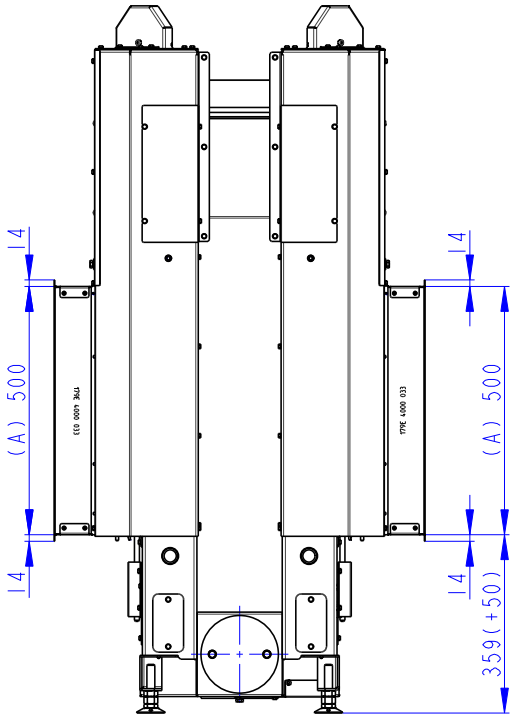

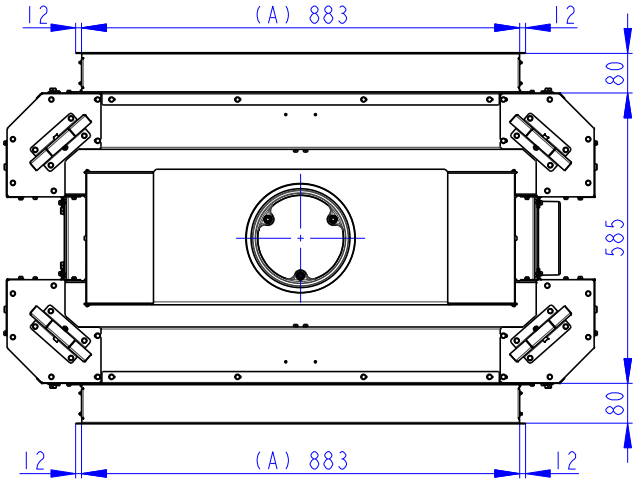

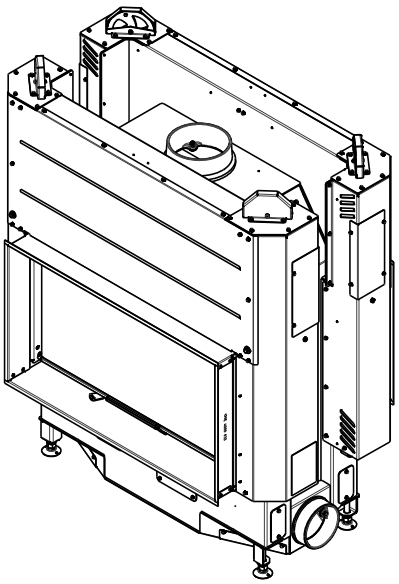

Romotop®

Heat T 3g L 88.50.01 (04) + H3LF RAM15 (2x)

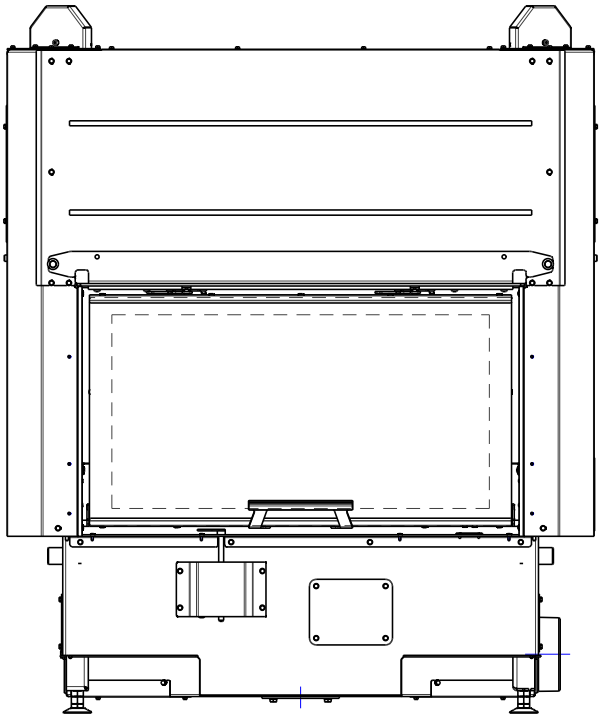

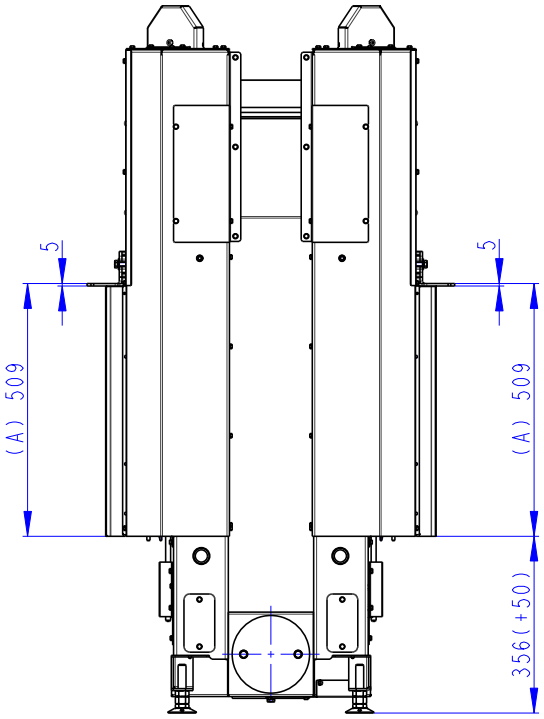

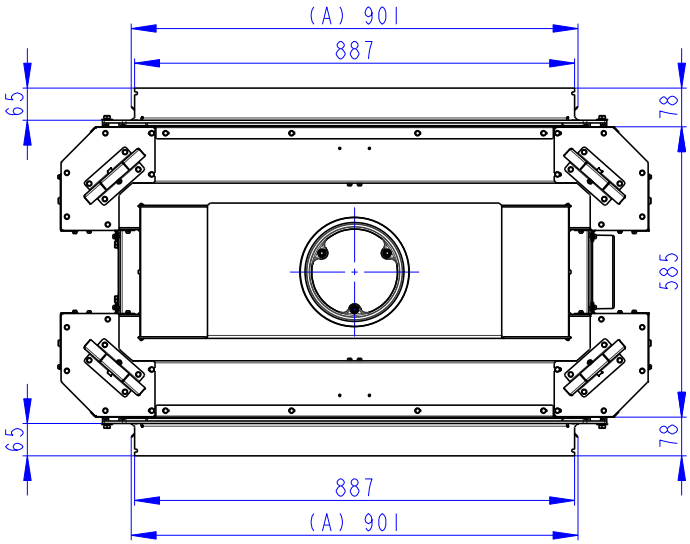

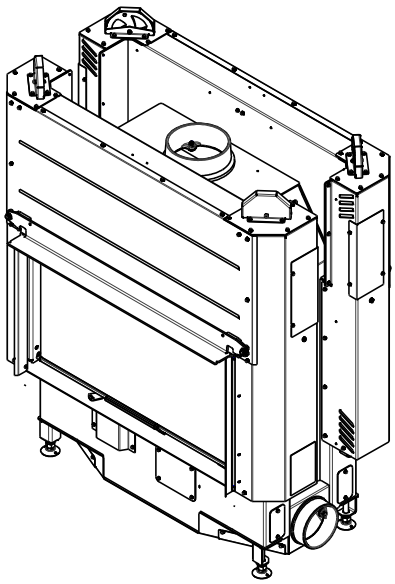

Romotop®

Heat T 3g L 88.50.01 (04) + H3LF RAM15 + H3LF RAM11 (2x)

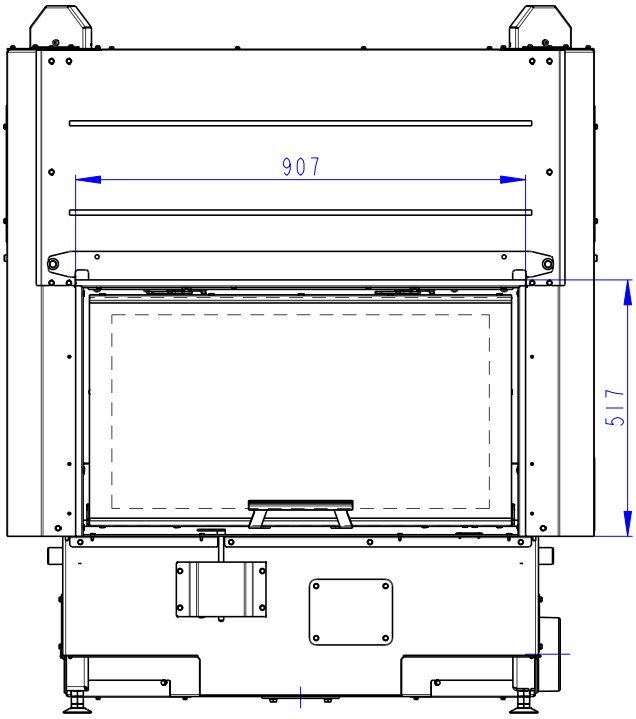

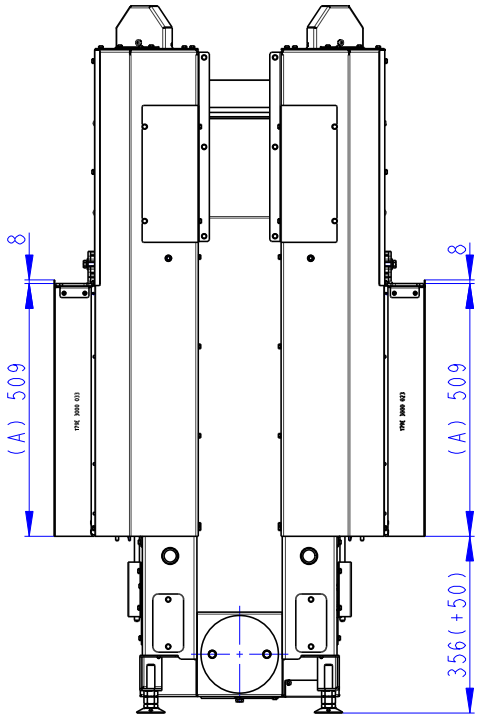

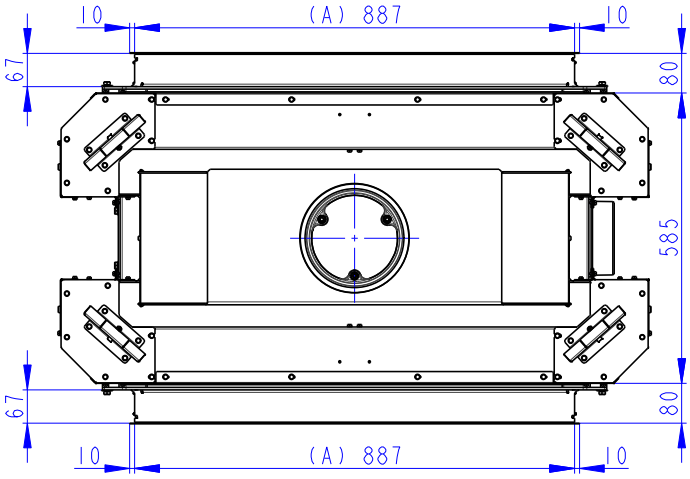

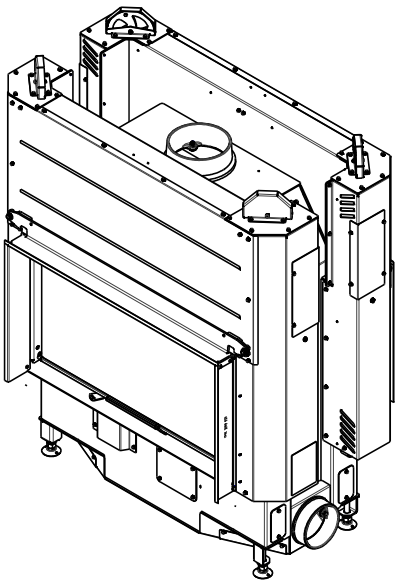

Romotop®

Heat T 3g L 88.50.01 (04) + H3LF RAM15 + H3LF RAM12 (2x)

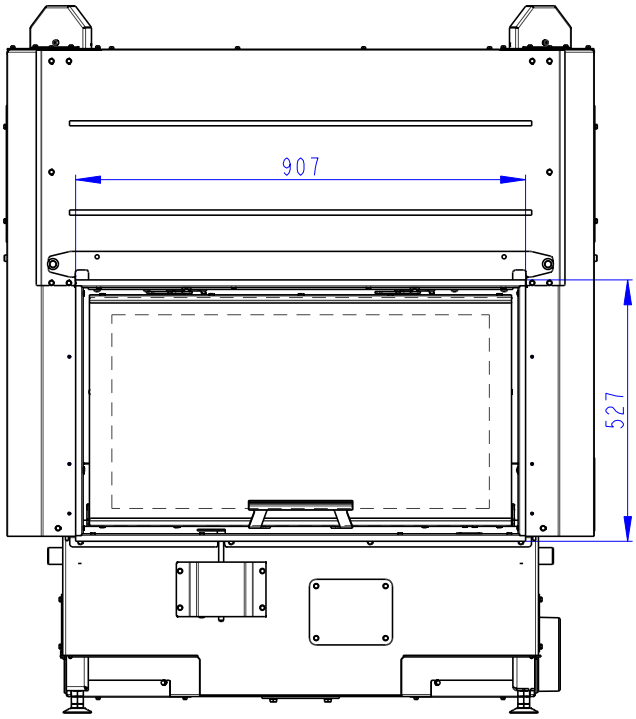

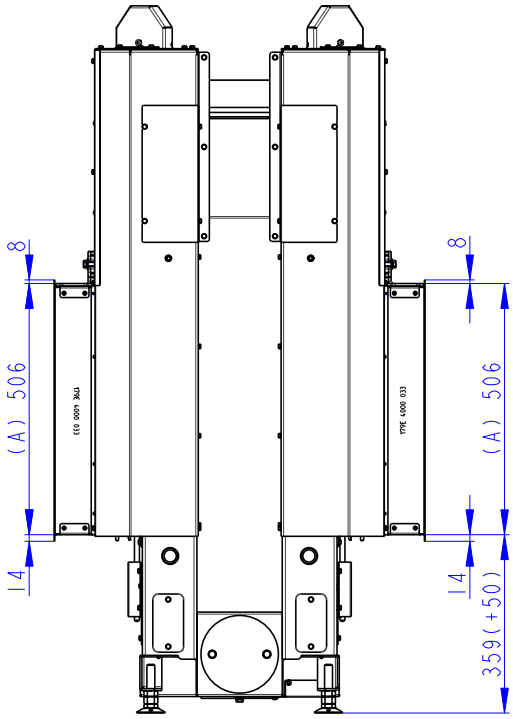

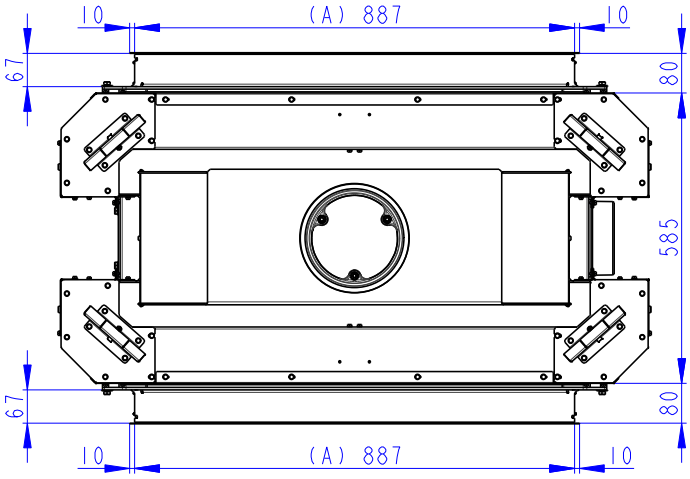

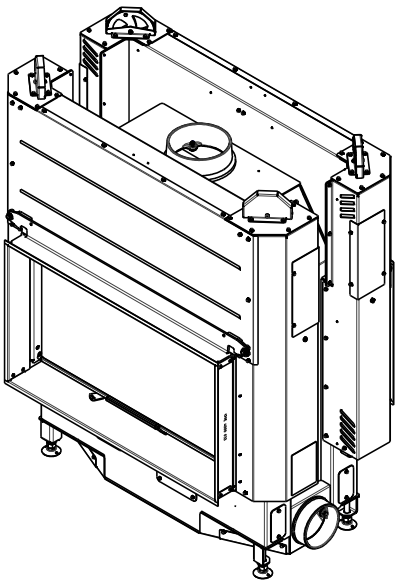

Romotop®

Heat T 3g L 88.50.01 (04)
+ H3LF RAM15 + H3LF RAM13 (2x)

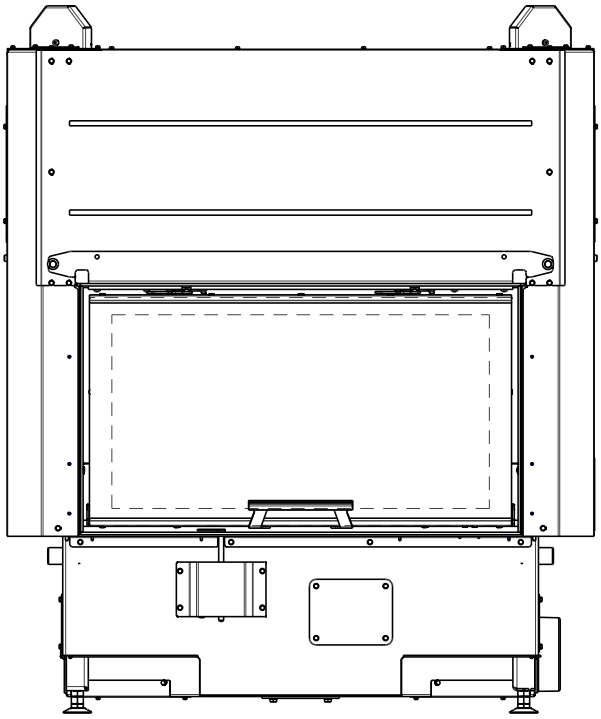

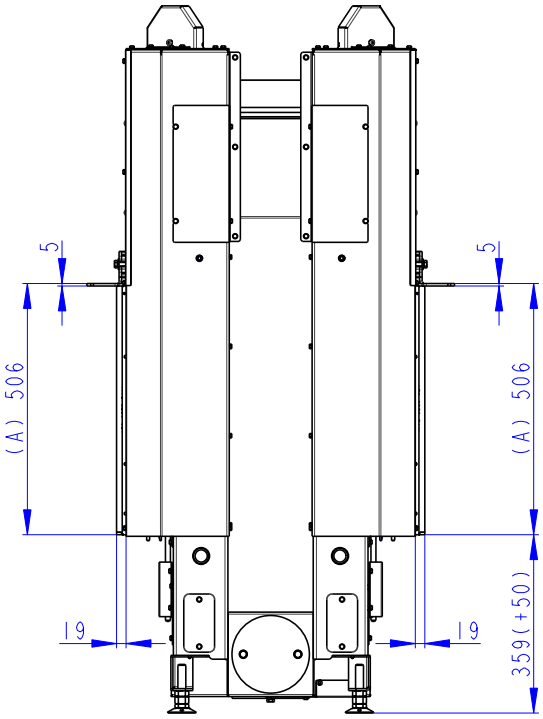

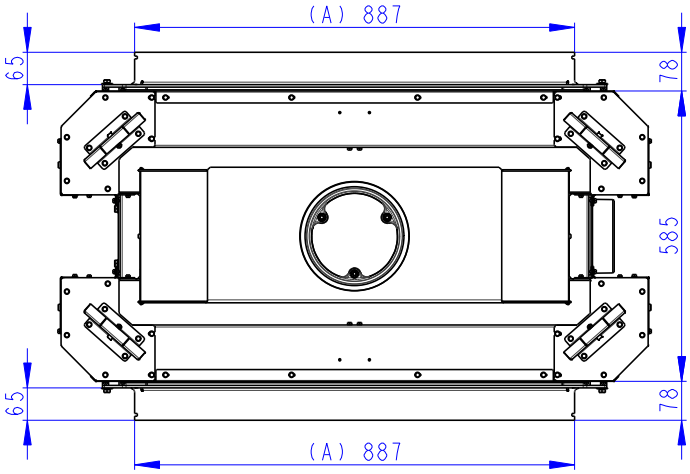

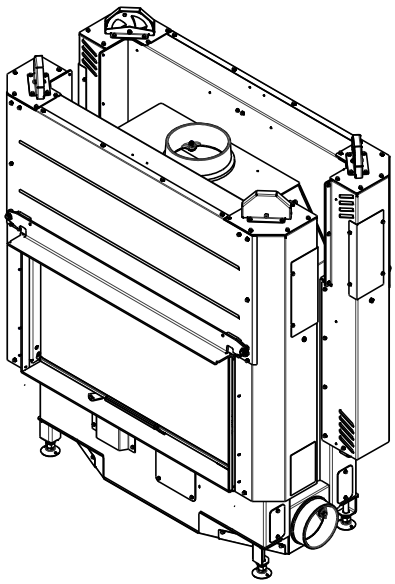

Romotop®
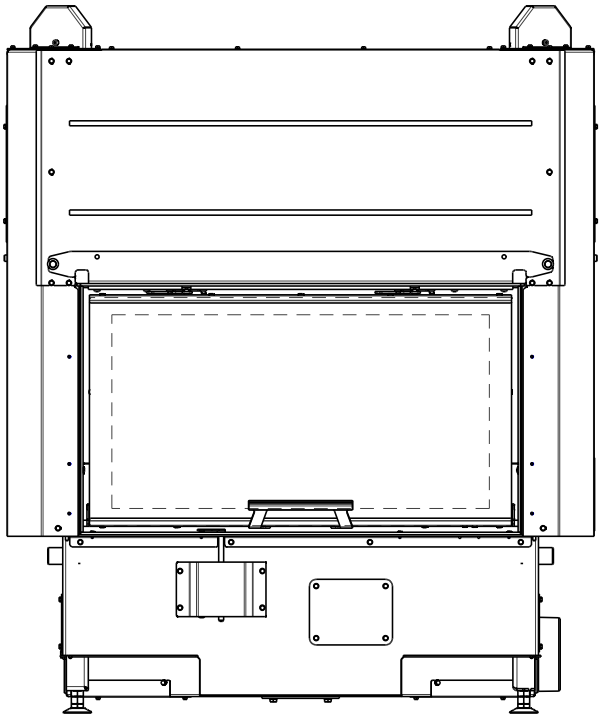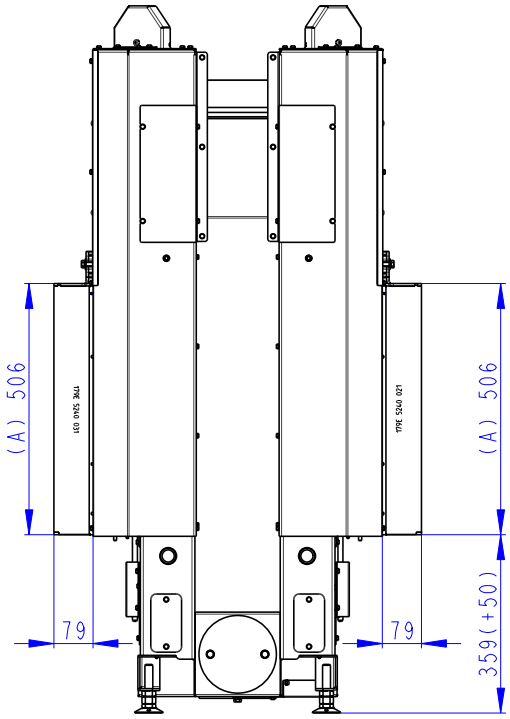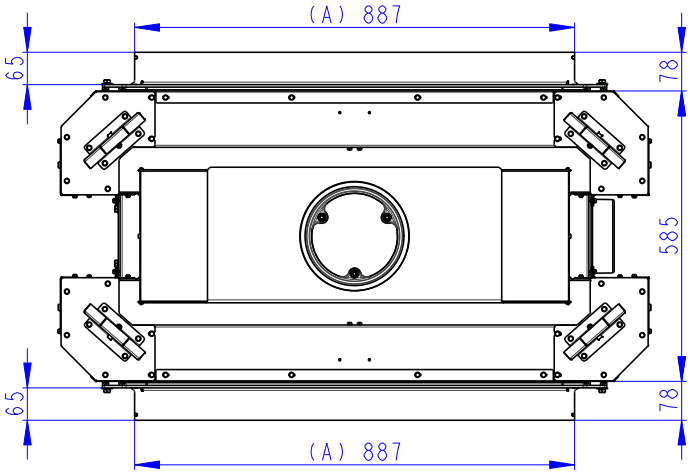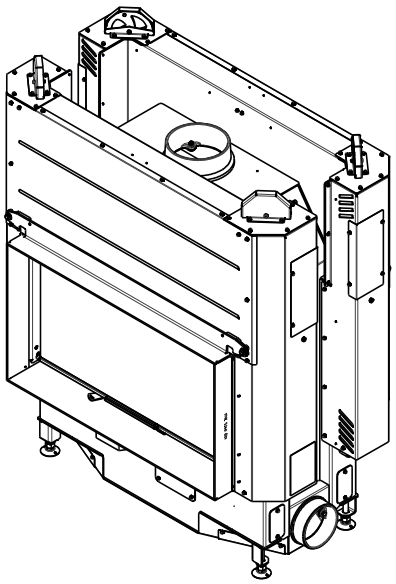
Heat T 3g L 88.50.01 (04) + H3LF RAM15 + H3LF RAM14 (2x)